Engineering motordata (WIN -100033)		
DC bus voltage	24	V DC
Nominal AC voltage	17	V AC (rms)
Rated voltage	12	V AC (rms)
Rated power	304	W
Rated speed	2000	rpm
Rated torque	1.45	Nm
Rated current	20.9	A (rms)
Peak torque	4.5	Nm
Peak current	66.49	A (rms)
Stall torque	1.5	Nm
Stall current	18.66	A (rms)
No load speed	3460	rpm
EMF constant ±10%	4.9	V AC (rms) / 1000rpm
Theoretical torque constant ±10%	0.08	Nm / A (rms)
Torque constant ±10% @ rated load	0.07	Nm / A (rms)
Number of poles	10	
Electrical time constant	1.39	ms
Winding terminal resistance	0.115	Ω
Rotary field terminal inductance	0.16	mH

Customs info	
HS Code	85015100

Mechanical motor data (setting 74)		
Max mechanical speed	12000	rpm
Mech. time constant	1.67	ms
Thermal time constant	23	min
Rotor inertia	0.55	kgcm²
Protection	IP64	
Color	RAL 9005	
Cooling	Convection	

Sensors	
Temperature	PT1000 {PT1000}
Feedback	AD36/1219Ax.xxBEx (Hengstler) multi-turn, 19+12 bits, BISS-C, 5V

Brake		
Braking torque	2.00	Nm
Voltage	24	V DC
Power @20°C	15.0	W
Current @20°C	0.63	A
Inertia	0.08	kgcm²
Mass	0.25	kg

Gearbox engineering data		
Gear ratio	64	
Efficiency*	88	%
Torsional stiffness	26.8	Nm/arcmin
Number of stages	2	
Rated output torque	40	Nm
Cycling output torque	80	Nm
Max output torque	128	Nm
Emergency output torque	200	Nm
Rated input speed	4500	rpm
Max input speed	10000	rpm
Operating temperature	<-40; 90>	°C
Max. backlash	< 1	arcmin
Service life	20000	h

** at rated speed & torque*

Lubrication	
Type	Low temperature
Lubricant	ISOFLEX PDB 38 CX 1000

Gearbox mechanical data		
Radial force for 20'000h	3950	N
Axial force for 20'000h	5450	N
Output shaft design	Flange	
Mass	3.45	kg
Input inertia	0.215	kgcm²
Protection	IP65	

Actuator data		
Rated speed	31	rpm
Rated torque	40.00	Nm
Cycling torque	80.00	Nm
Peak torque	128.00	Nm
Emergency stop torque	200.00	Nm
EMF constant ±10%	313.6	V AC (rms) / 1000rpm
Torque constant ±10% @ rated load	3.91	Nm / A (rms)
Output inertia	3133.4	kgcm²

Torque / speed curve

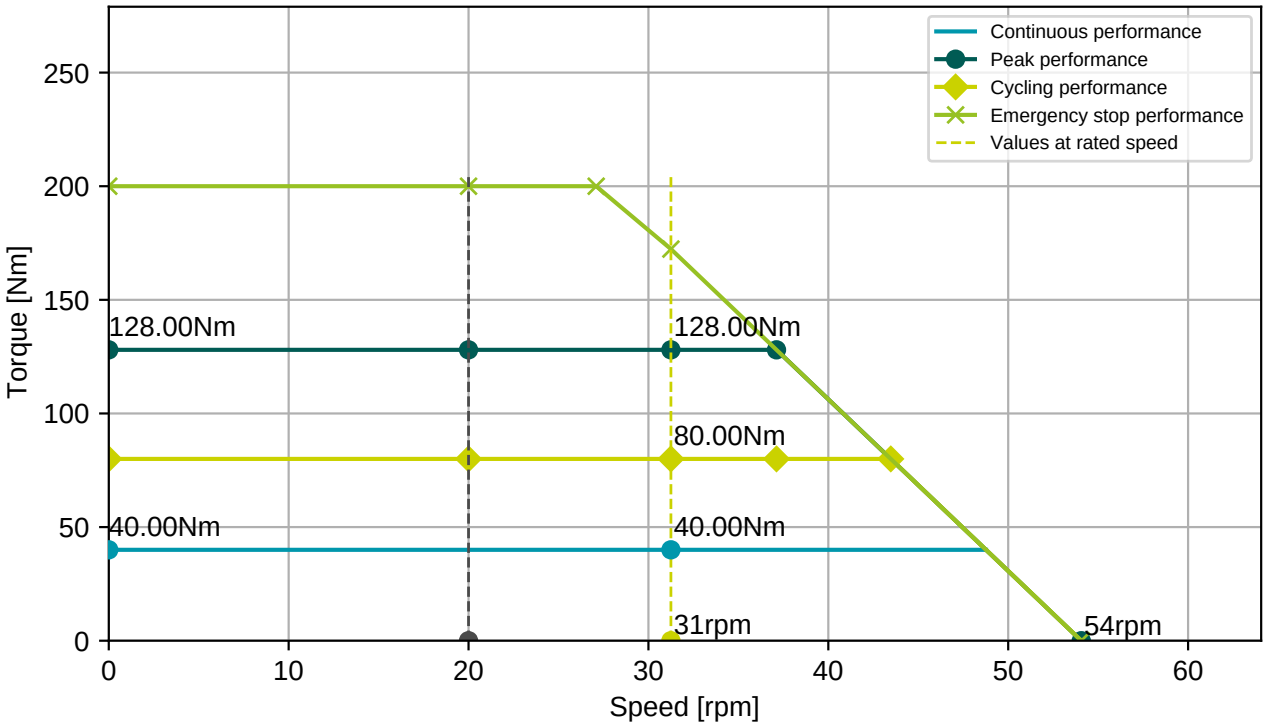

TVP00RW-17-06P

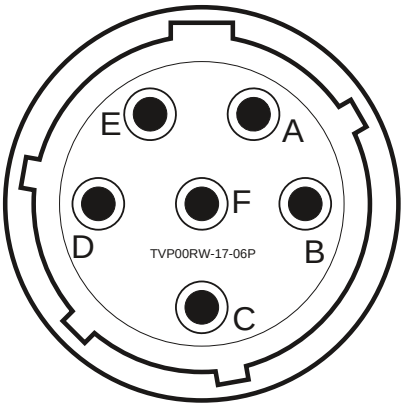

TVP00RW-11-35P

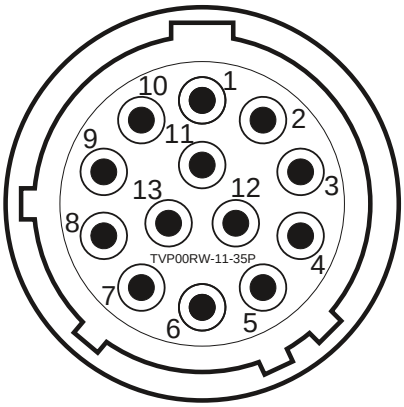

Connector 1 (202)	
A	U
B	V
C	W
D	PE
E	Bremse +
F	Bremse -

Connector 2 (520)	
1	Vcc
2	GND
3	DATA
4	DATA-
5	CLOCK
6	CLOCK-
7	Therm+
8	Therm-

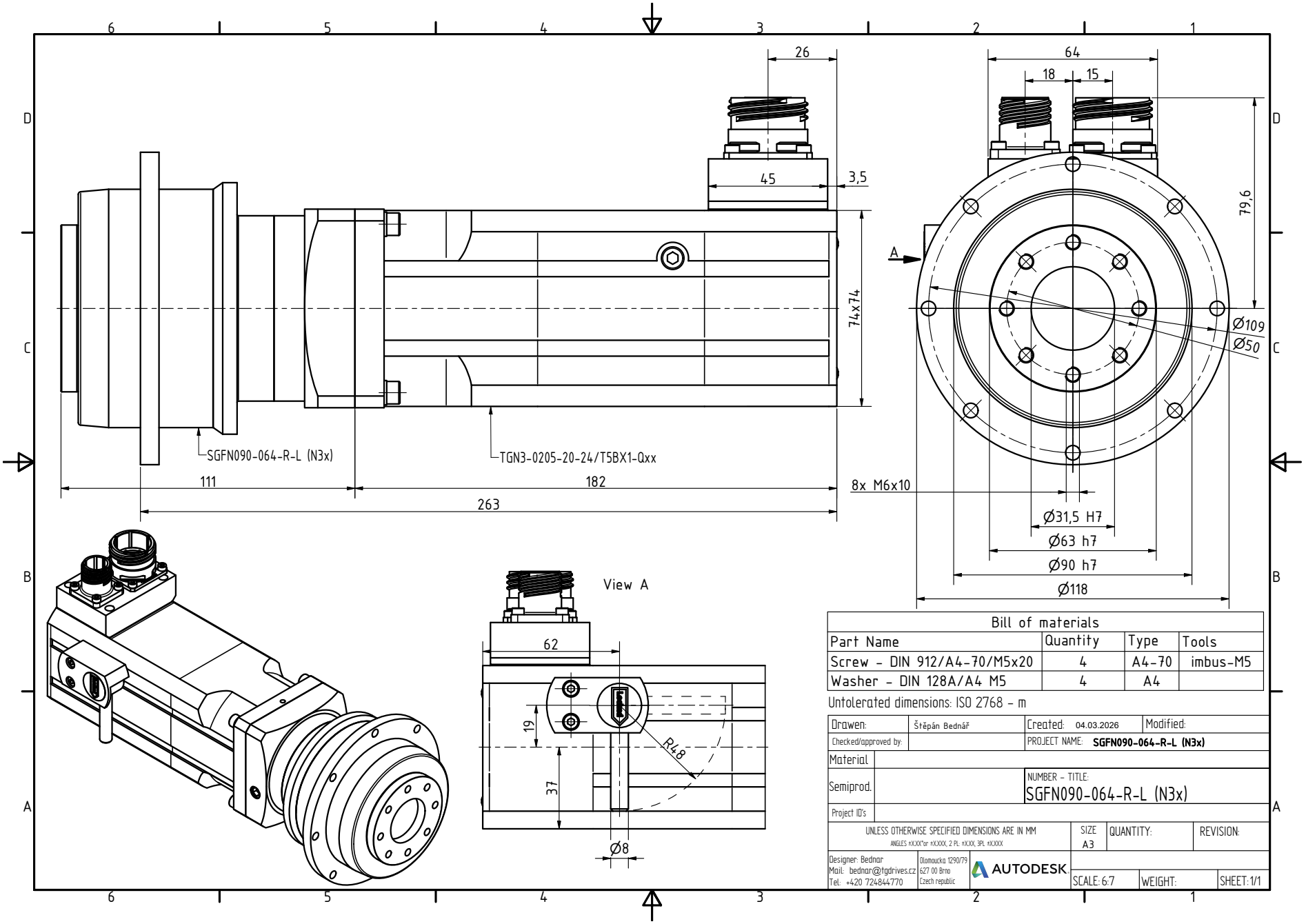

Bill of materials			
Part Name	Quantity	Type	Tools
Screw - DIN 912/A4-70/M5x20	4	A4-70	imbus-M5
Washer - DIN 128A/A4 M5	4	A4	

Untolerated dimensions: ISO 2768 - m

Drawen:	Štěpán Bednář	Created: 04.03.2026	Modified:
Checked/approved by:		PROJECT NAME: **SGFN090-064-R-L (N3x)**	
Material			
Semiprod.		NUMBER - TITLE: SGFN090-064-R-L (N3x)	
Project ID's			

UNLESS OTHERWISE SPECIFIED DIMENSIONS ARE IN MM
ANGLES ±X.XX° or ±X.XXX, 2 PL. ±X.XX, 3PL ±X.XXX

SIZE A3 | QUANTITY: | REVISION:

Designer: Bednar
Mail: bednar@tgdrives.cz
Tel: +420 724844770

Olomoucka 1290/79
627 00 Brno
Czech republic

AUTODESK

SCALE: 6:7 | WEIGHT: | SHEET: 1/1

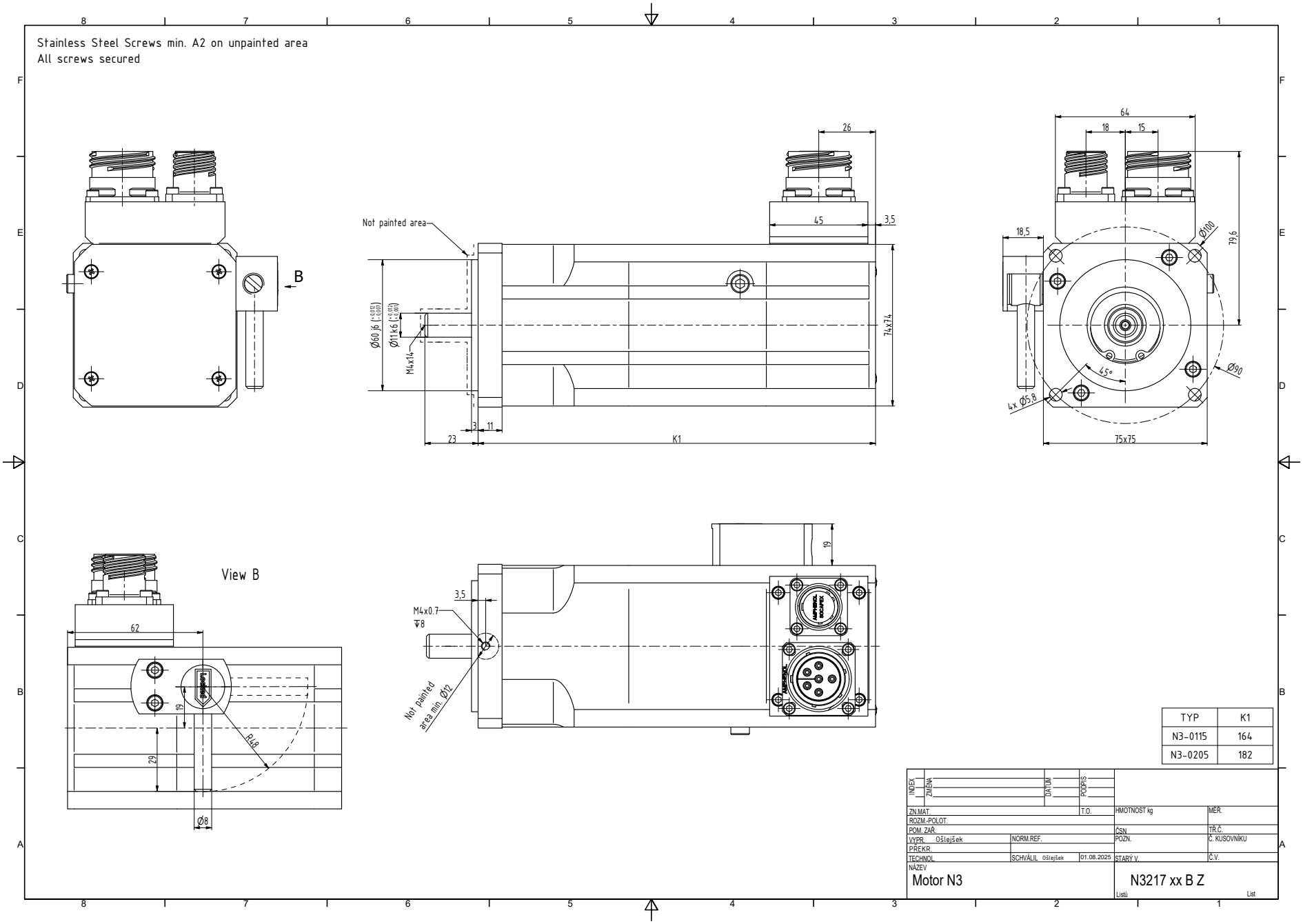

TYP	K1
N3-0115	164
N3-0205	182

INDEX	ZMĚNA	DATUM	PODPIS		
ZN.MAT.			T.O.	HMOTNOST kg	MĚR.
ROZM.-POLOT.					
POM. ZAŘ.				ČSN	TŘ.Č.
VYPR. Ošlejšek	NORM.REF.			POZN.	Č. KUSOVNÍKU
PŘEKR.					
TECHNOL.	SCHVÁLIL Ošlejšek	01.08.2025		STARÝ V.	Č.V.
NÁZEV	Motor N3			N3217 xx B Z	
				Listů	List

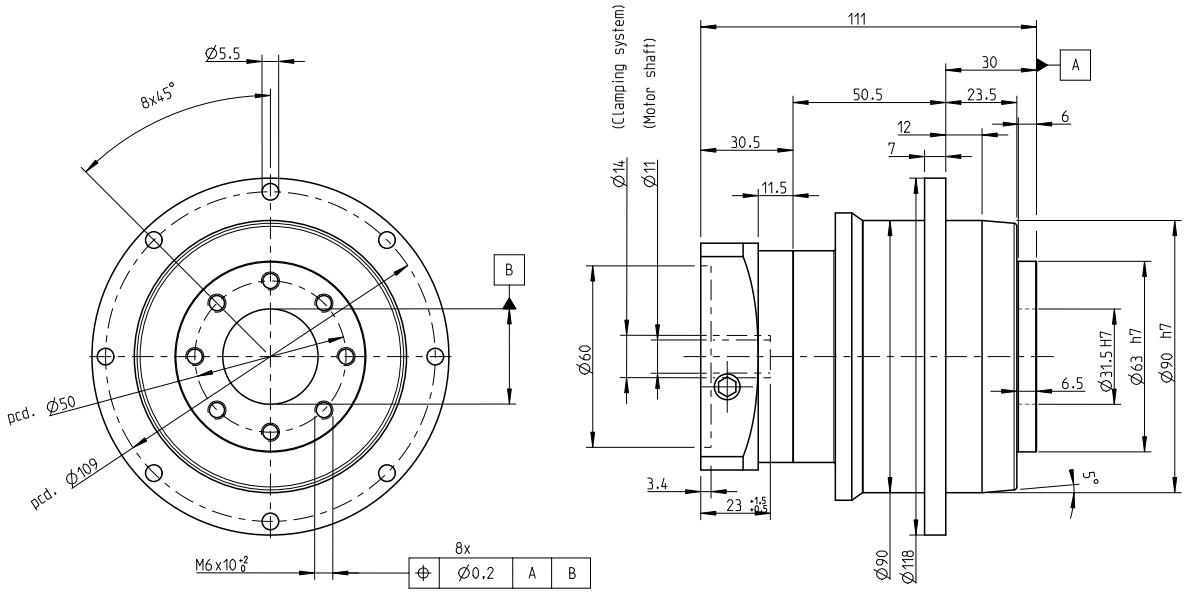

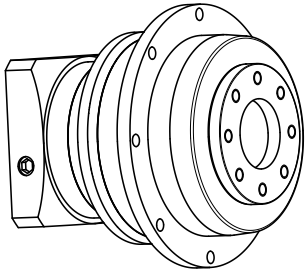

INDEX	ZMĚNA	DATUM	PODPIS		
ZM.MAT.			T.O.	HMOTNOST kg	MĚŘ.
ROZM.-POLOT.					
ROZM. ZAŘ.				ČSN	TŘ.Č.
VYPR.	NORM. REF.			POZN.	Č. KUSOVNÍKU
PŘEKR.					
TECHNOL.	SCHVÁLIL.	12.9.2020		STARÝ V.	Č.V.

NÁZEV

Gearbox SGFN090

TGN3, TGH3, TGT3

Listů List