Engineering data (WIN 731)		
DC bus voltage	560	V DC
Nominal AC voltage	380	V AC (rms)
Rated voltage	296	V AC (rms)
Rated power	4.3	kW
Rated speed	3000	rpm
Rated torque	13.80	Nm
Rated current	9.89	A (rms)
Peak torque	48	Nm
Peak current	35.6	A (rms)
Stall torque	16	Nm
Stall current	10.1	A (rms)
No load speed	3950	rpm
EMF constant ±10%	96	V AC (rms) / 1000rpm
Theoretical torque constant ±10%	1.59	Nm / A (rms)
Torque constant ±10% @ rated load	1.40	Nm / A (rms)
Number of poles	10	
Electrical time constant	8.52	ms
Winding terminal resistance	0.88	Ω
Rotary field terminal inductance	7.5	mH

Certifications & customs info	
HS Code	85015220
UL isolation	Compliant

Mechanical data (setting 6)		
Max mechanical speed	9000	rpm
Mech. time constant	0.70	ms
Thermal time constant	55	min
Rotor inertia	11.5	kgcm²
Protection	IP64	
Color	RAL 9005	
Cooling	Convection	

Sensors	
Temperature	KTY 84-130 {KTY 84-130 Reissmann}
Feedback	2-pole resolver (TAMAGAWA-TS2620N21E11)

Brake		
Braking torque	18.00	Nm
Voltage	24	V DC
Power @20°C	24.0	W
Current @20°C	1.00	A
Inertia	2.00	kgcm²
Mass	1.80	kg

Note

- Resolver wires (including connector) - length 110 mm from B-flange

- U, V, W, PE wires - length 250mm from B-flange

Torque / speed curve

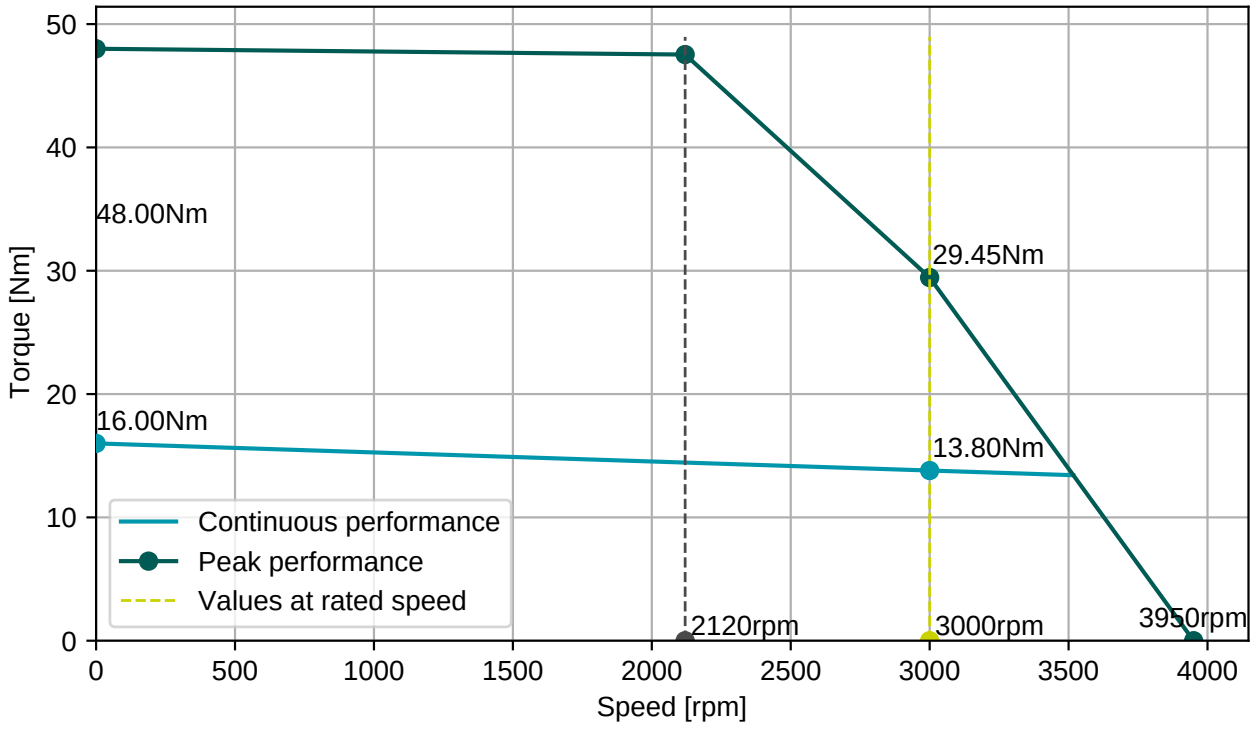

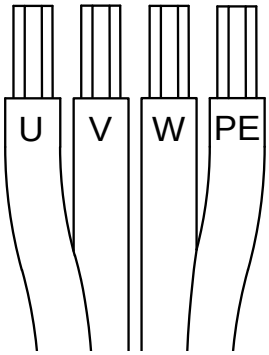

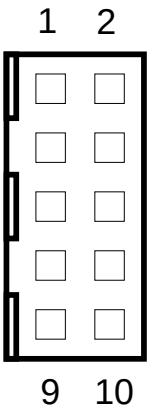

Connector 1 (244)	
white	U
blue	V
red	W
green/yellow	PE (GND)

Connector 2 (170)	
1	S1 (red)
2	S3 (black)
3	S4 (blue)
4	S2 (yellow)
5	R2 (yellow/white)
6	R1 (red/white)
7	Brake+
8	Brake-
9	Therm-
10	Therm+

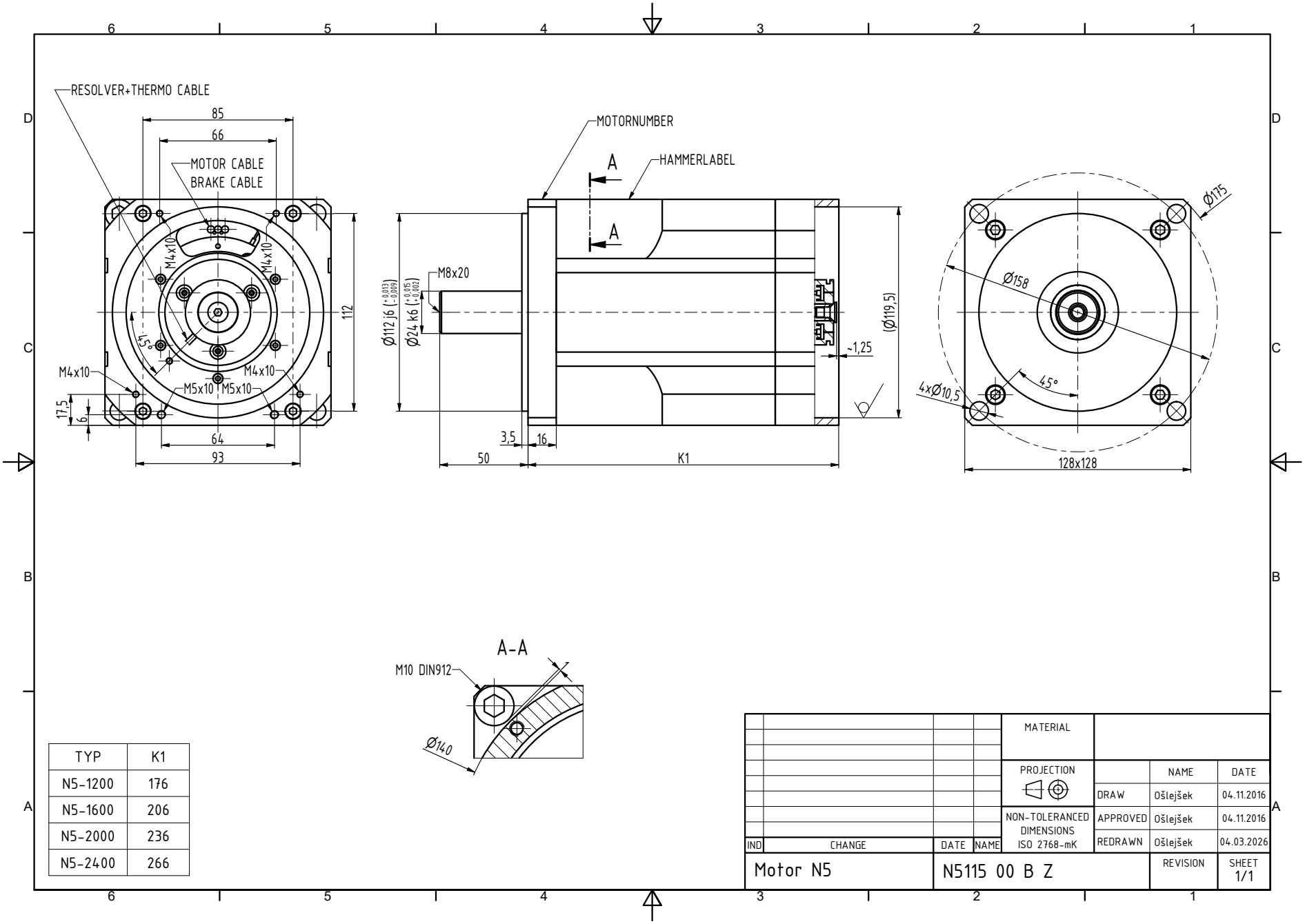

TYP	K1
N5-1200	176
N5-1600	206
N5-2000	236
N5-2400	266

IND	CHANGE	DATE	NAME

MATERIAL

PROJECTION

NON-TOLERANCED DIMENSIONS ISO 2768-mK

	NAME	DATE
DRAW	Ošlejšek	04.11.2016
APPROVED	Ošlejšek	04.11.2016
REDRAWN	Ošlejšek	04.03.2026

Motor N5

N5115 00 B Z

REVISION

SHEET 1/1