| Engineering motordata (WIN -100032) | | |
|---|---|---|
| DC bus voltage | 48 | V DC |
| Nominal AC voltage | 33 | V AC (rms) |
| Rated voltage | 31 | V AC (rms) |
| Rated power | 838 | W |
| Rated speed | 4000 | rpm |
| Rated torque | 2.00 | Nm |
| Rated current | 17.41 | A (rms) |
| Peak torque | 8.1 | Nm |
| Peak current | 83.55 | A (rms) |
| Stall torque | 3.1 | Nm |
| Stall current | 26.1 | A (rms) |
| No load speed | 4590 | rpm |
| EMF constant ±10% | 7.2 | V AC (rms) / 1000rpm |
| Theoretical torque constant ±10% | 0.12 | Nm / A (rms) |
| Torque constant ±10% @ rated load | 0.11 | Nm / A (rms) |
| Number of poles | 10 | |
| Electrical time constant | 4.74 | ms |
| Winding terminal resistance | 0.057 | Ω |
| Rotary field terminal inductance | 0.27 | mH |

| Customs info | |
|---|---|
| HS Code | 85015220 |

| Mechanical motor data (setting 48) | | |
|---|---|---|
| Max mechanical speed | 9000 | rpm |
| Mech. time constant | 1.16 | ms |
| Thermal time constant | 35 | min |
| Rotor inertia | 1.67 | kgcm² |
| Protection | IP64 | |
| Color | RAL 9005 | |
| Cooling | Convection | |

| Sensors | |
|---|---|
| Temperature | PT100 {PT100} |
| Feedback | EES37 (HDSL) single-turn, 15 bits, safety SIL2 |

| Brake | | |
|---|---|---|
| Braking torque | 9.00 | Nm |
| Voltage | 24 | V DC |
| Power @20°C | 18.0 | W |
| Current @20°C | 0.75 | A |
| Inertia | 0.60 | kgcm² |
| Mass | 0.82 | kg |

| Gearbox engineering data | | |
|---|---|---|
| Gear ratio | 20 | |
| Efficiency* | 96 | % |
| Torsional stiffness | 38.5 | Nm/arcmin |
| Number of stages | 2 | |
| Rated output torque | 102 | Nm |
| Cycling output torque | 120 | Nm |
| Max output torque | 192 | Nm |
| Emergency output torque | 240 | Nm |
| Rated input speed | 4000 | rpm |
| Max input speed | 7000 | rpm |
| Operating temperature | <-25; 90> | °C |
| Max. backlash | < 9 | arcmin |
| Service life | 20000 | h |

** at rated speed & torque*

| Lubrication | |
|---|---|
| Type | Standard |
| Lubricant | Klübersynth GE 14-112 |

| Gearbox mechanical data | | |
|---|---|---|
| Radial force for 20'000h | 4950 | N |
| Axial force for 20'000h | 5450 | N |
| Output shaft design | Flange | |
| Mass | 4.2 | kg |
| Input inertia | 0.418 | kgcm² |
| Protection | IP65 | |

| Actuator data | | |
|---|---|---|
| Rated speed | 200 | rpm |
| Rated torque | 38.40 | Nm |
| Cycling torque | 120.00 | Nm |
| Peak torque | 155.52 | Nm |
| Emergency stop torque | 162.00 | Nm |
| EMF constant ±10% | 144.0 | V AC (rms) / 1000rpm |
| Torque constant ±10% @ rated load | 2.21 | Nm / A (rms) |
| Output inertia | 835.2 | kgcm² |

Torque / speed curve

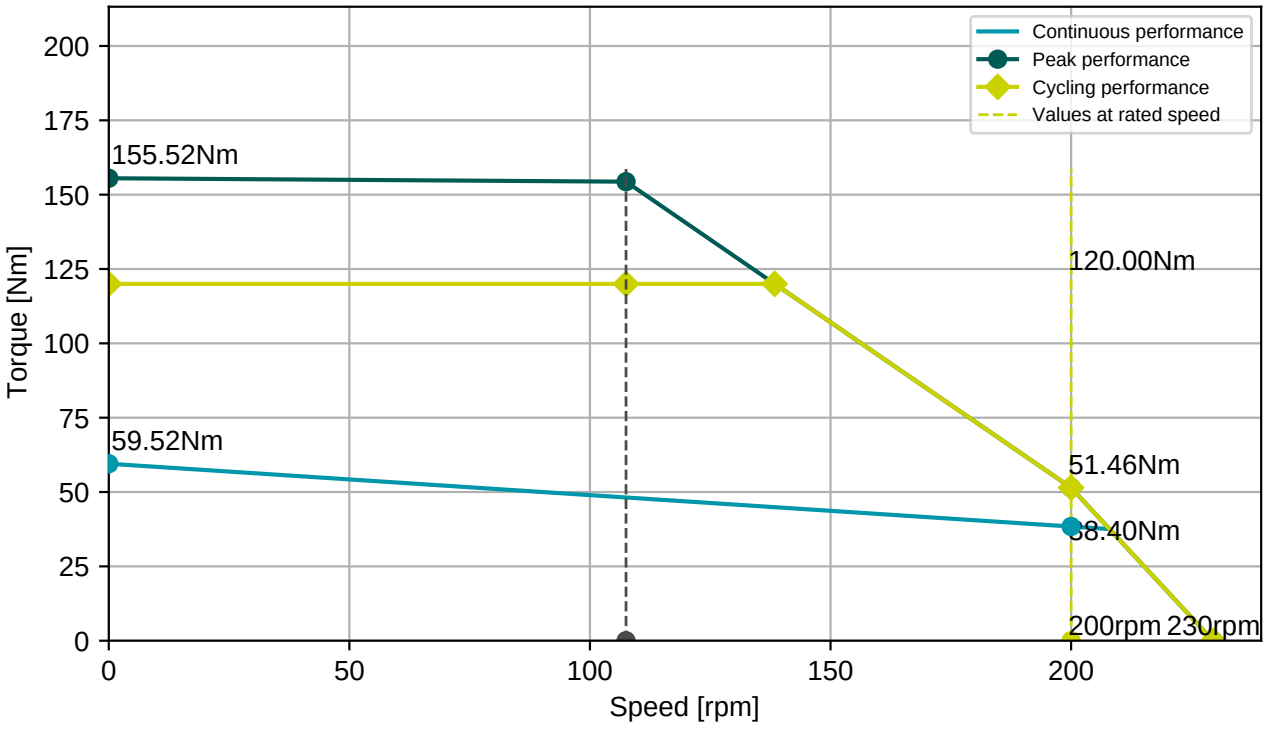


**Cable DSL4x2,5 (2x0,25)+(2x1),**
**D=13,5±0,4mm**

| Connector 1 (306) | |
|---|---|
| **1** | U |
| **2** | V |
| **3** | W |
| **PE** | PE |
| **5** | Brake+ |
| **6** | Brake- |
| **brown** | +Us/DSL+ |
| **white** | GND/DSL- |

*Numbers printed on the cables*

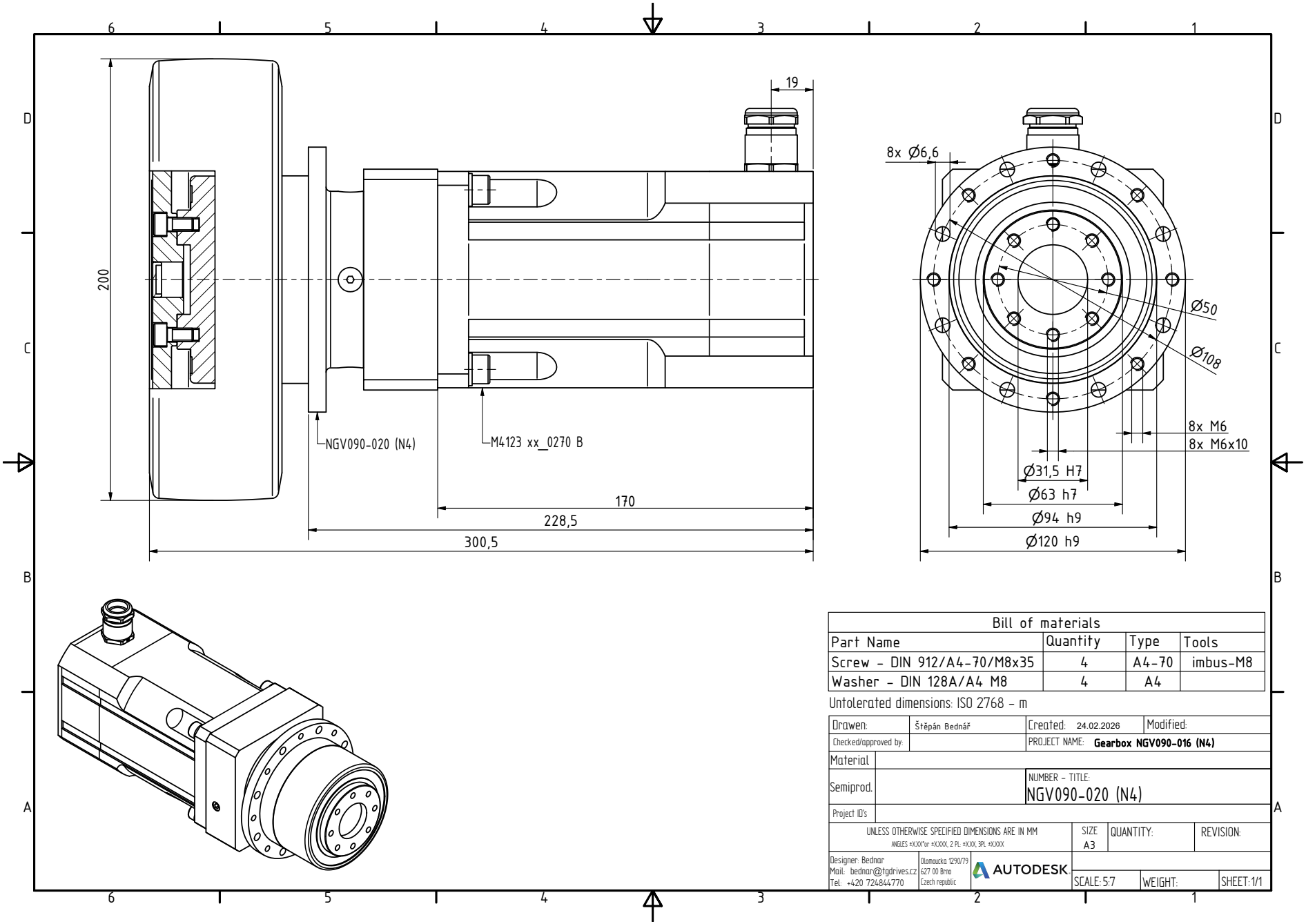




| Bill of materials | | | |
|---|---|---|---|
| Part Name | Quantity | Type | Tools |
| Screw - DIN 912/A4-70/M8x35 | 4 | A4-70 | imbus-M8 |
| Washer - DIN 128A/A4 M8 | 4 | A4 | |

Untolerated dimensions: ISO 2768 - m

| | | | |
|---|---|---|---|
| Drawen: | Štěpán Bednář | Created: 24.02.2026 | Modified: |
| Checked/approved by: | | PROJECT NAME: **Gearbox NGV090-016 (N4)** | |
| Material | | | |
| Semiprod. | | NUMBER - TITLE: NGV090-020 (N4) | |
| Project ID's | | | |
| UNLESS OTHERWISE SPECIFIED DIMENSIONS ARE IN MM ANGLES ±XXX° or ±XXXX, 2 PL ±XXX, 3PL ±XXXX | | SIZE A3 / QUANTITY: / REVISION: | |
| Designer: Bednar Mail: bednar@tgdrives.cz Tel: +420 724844770 | Olomoucka 1290/79 627 00 Brno Czech republic | AUTODESK | SCALE: 5:7 / WEIGHT: / SHEET: 1/1 |

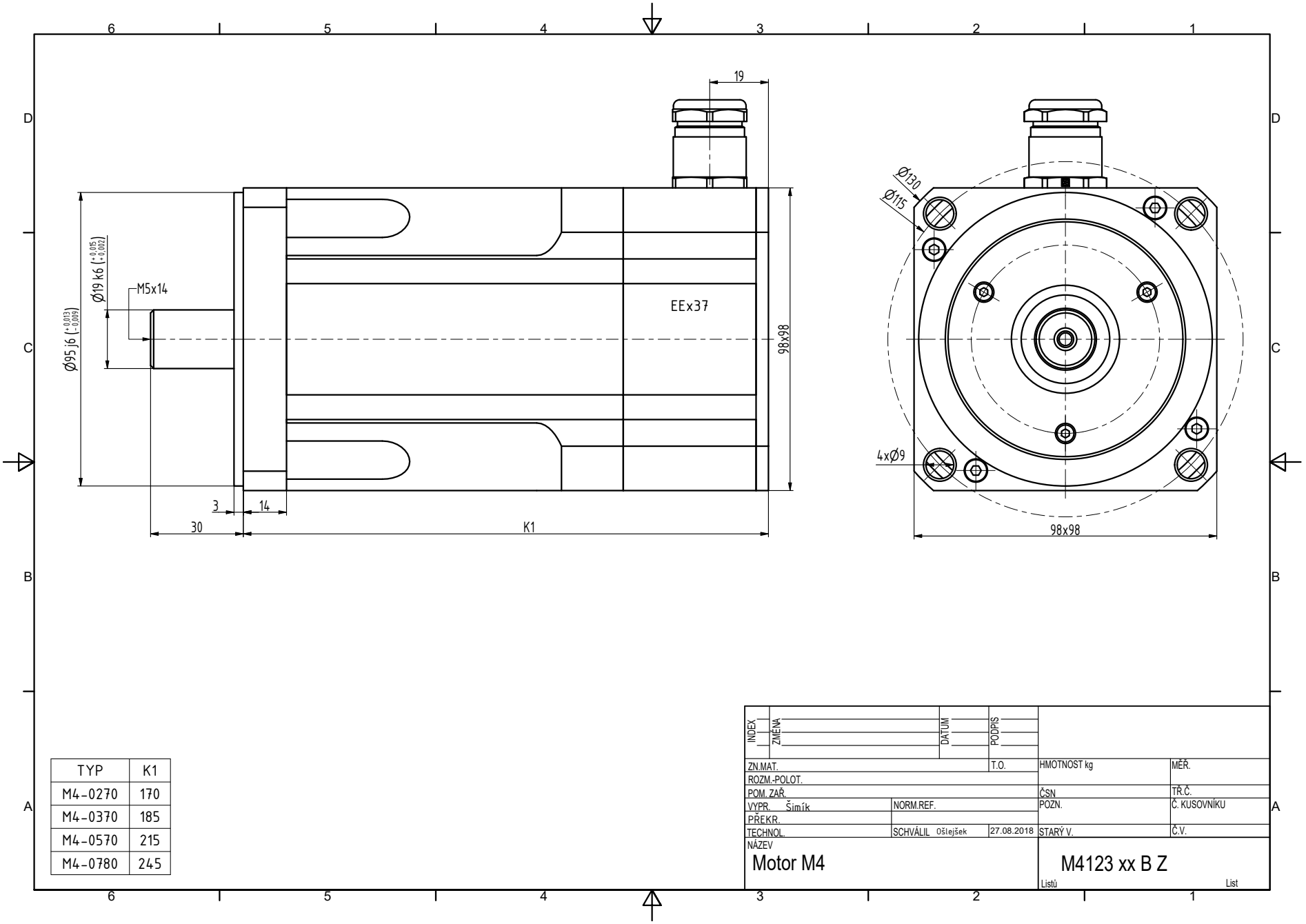


| TYP | K1 |
|---|---|
| M4-0270 | 170 |
| M4-0370 | 185 |
| M4-0570 | 215 |
| M4-0780 | 245 |

| INDEX | ZMĚNA | DATUM | PODPIS | | |
|---|---|---|---|---|---|
| ZN.MAT. | | | T.O. | HMOTNOST kg | MĚŘ. |
| ROZM.-POLOT. | | | | | |
| POM. ZAŘ. | | | | ČSN | TŘ.Č. |
| VYPR. Šimík | | NORM.REF. | | POZN. | Č. KUSOVNÍKU |
| PŘEKR. | | | | | |
| TECHNOL. | | SCHVÁLIL Ošlejšek | 27.08.2018 | STARÝ V. | Č.V. |
| NÁZEV | | | | | |
| Motor M4 | | | | M4123 xx B Z | |
| | | | | Listů | List |

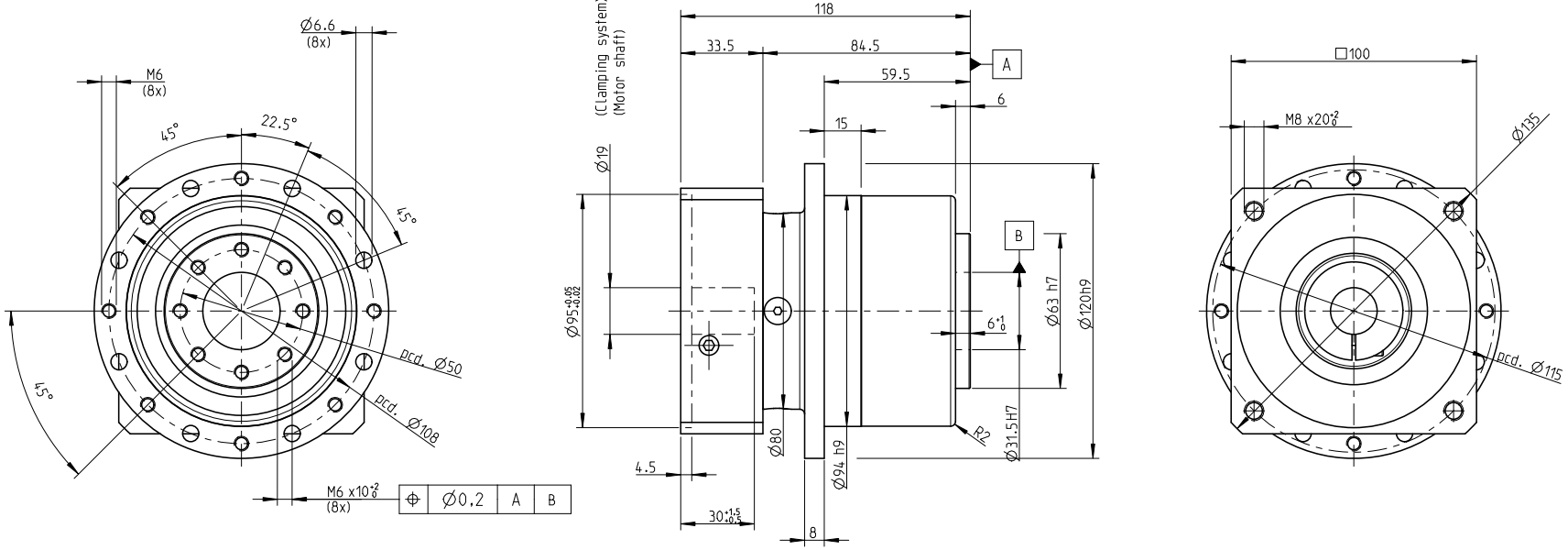


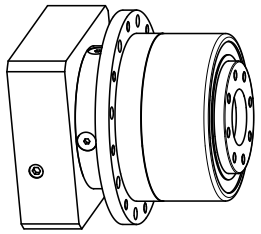

| INDEX | ZMĚNA | DATUM | PODPIS | |
|---|---|---|---|---|
| | | | | |
| ZM.MAT. | | T.O. | HMOTNOST kg | MĚŘ. |
| ROZM.-POLOT. | | | | |
| ROZM. ZAŘ. | | | ČSN | TŘ.Č. |
| VYPR. | NORM. REF. | | POZN. | Č. KUSOVNÍKU |
| PŘEKR. | | | | |
| TECHNOL. | SCHVÁLIL. | 12.9.2020 | STARÝ V. | Č.V. |

NÁZEV

Gearbox NGV090

TGN4, TGH4, TGT4

Listů List

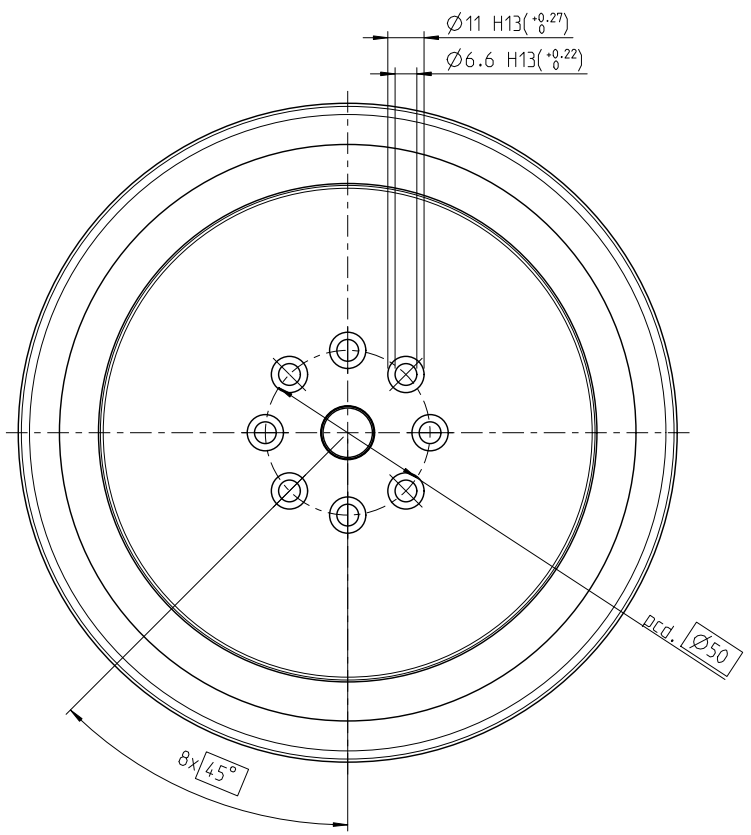


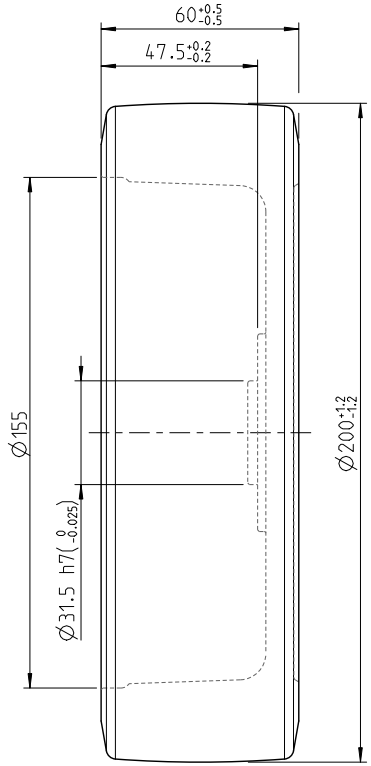


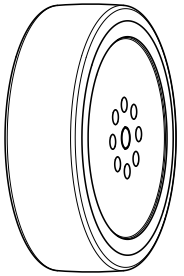

| | | | |
|---|---|---|---|
| Weight (without screws) | $m_s$ | kg | 3,6 |
| Mass inertia (without screws) | J | $kgcm^2$ | 202,93 |
| Threat | - | - | Blickle Besthane®, 92° Shore A (brown) |
| Rim | - | - | Gray cast iron (painted in silver) |
| Permissible speed | $v_{max}$ | m/s | 2 |
| Permissible payload | $F_{max}$ | kg | 800 |

| INDEX | ZMĚNA | DATUM | PODPIS |
|---|---|---|---|
| | | | |

| | | | | |
|---|---|---|---|---|
| ZM.MAT. | | T.O. | HMOTNOST kg | MĚŘ. |
| ROZM.-POLOT. | | | | |
| ROZM. ZAŘ. | | | ČSN | TŘ.Č. |
| VYPR. | NORM. REF. | | POZN. | Č. KUSOVNÍKU |
| PŘEKR. | | | | |
| TECHNOL. | SCHVÁLIL. | 12.9.2020 | STARÝ V. | Č.V. |
| NÁZEV | | | | |
| | | | Listů | List |