Engineering motordata (WIN 1726)		
DC bus voltage	24	V DC
Nominal AC voltage	17	V AC (rms)
Rated voltage	13	V AC (rms)
Rated power	2.6	kW
Rated speed	3000	rpm
Rated torque	8.40	Nm
Rated current	131.42	A (rms)
Peak torque	20	Nm
Peak current	358.11	A (rms)
Stall torque	11.6	Nm
Stall current	172.74	A (rms)
No load speed	4180	rpm
EMF constant ±10%	4.1	V AC (rms) / 1000rpm
Theoretical torque constant ±10%	0.07	Nm / A (rms)
Torque constant ±10% @ rated load	0.06	Nm / A (rms)
Number of poles	10	
Electrical time constant	6.67	ms
Winding terminal resistance	0.003	Ω
Rotary field terminal inductance	0.02	mH

Customs info	
HS Code	85015220

Mechanical motor data (setting 5)		
Max mechanical speed	9000	rpm
Mech. time constant	0.95	ms
Thermal time constant	40	min
Rotor inertia	8.4	kgcm²
Protection	IP65	
Color	RAL 9005	
Cooling	Convection	

Sensors	
Temperature	PT1000 {PT1000}
Feedback	AD36 (BISS-C) multi-turn, 22+12 bits, 5 VDC

Brake		
Braking torque	18.00	Nm
Voltage	24	V DC
Power @20°C	24.0	W
Current @20°C	1.00	A
Inertia	2.00	kgcm²
Mass	1.80	kg

Gearbox engineering data		
Gear ratio	20	
Efficiency*	96	%
Torsional stiffness	223	Nm/arcmin
Number of stages	2	
Rated output torque	500	Nm
Cycling output torque	1000	Nm
Max output torque	1540	Nm
Emergency output torque	2000	Nm
Rated input speed	2100	rpm
Max input speed	8500	rpm
Operating temperature	<-40; 60>	°C
Max. backlash	< 1	arcmin
Service life	20000	h

** at rated speed & torque*

Gearbox mechanical data		
Radial force for 20'000h	12000	N
Radial force for 30'000h	11000	N
Max. radial force	12000	N
Axial force for 20'000h	8500	N
Axial force for 30'000h	7500	N
Max. axial force	8500	N
Tilting moment for 20'000h	1219	Nm
Tilting moment for 30'000h	1117	Nm
Max. bending moment	80	Nm
Output shaft design	Flange	
Mass	14.81	kg
Input inertia	2.423	kgcm²
Protection	IP65	

Lubrication	
Type	Low temperature
Lubricant	Klübersynth GH 6-32

Actuator data		
Rated speed	105	rpm
Rated torque	179.71	Nm
Cycling torque	384.00	Nm
Peak torque	384.00	Nm
Emergency stop torque	400.00	Nm
EMF constant ±10%	82.0	V AC (rms) / 1000rpm
Torque constant ±10% @ rated load	1.23	Nm / A (rms)
Output inertia	4329.2	kgcm²

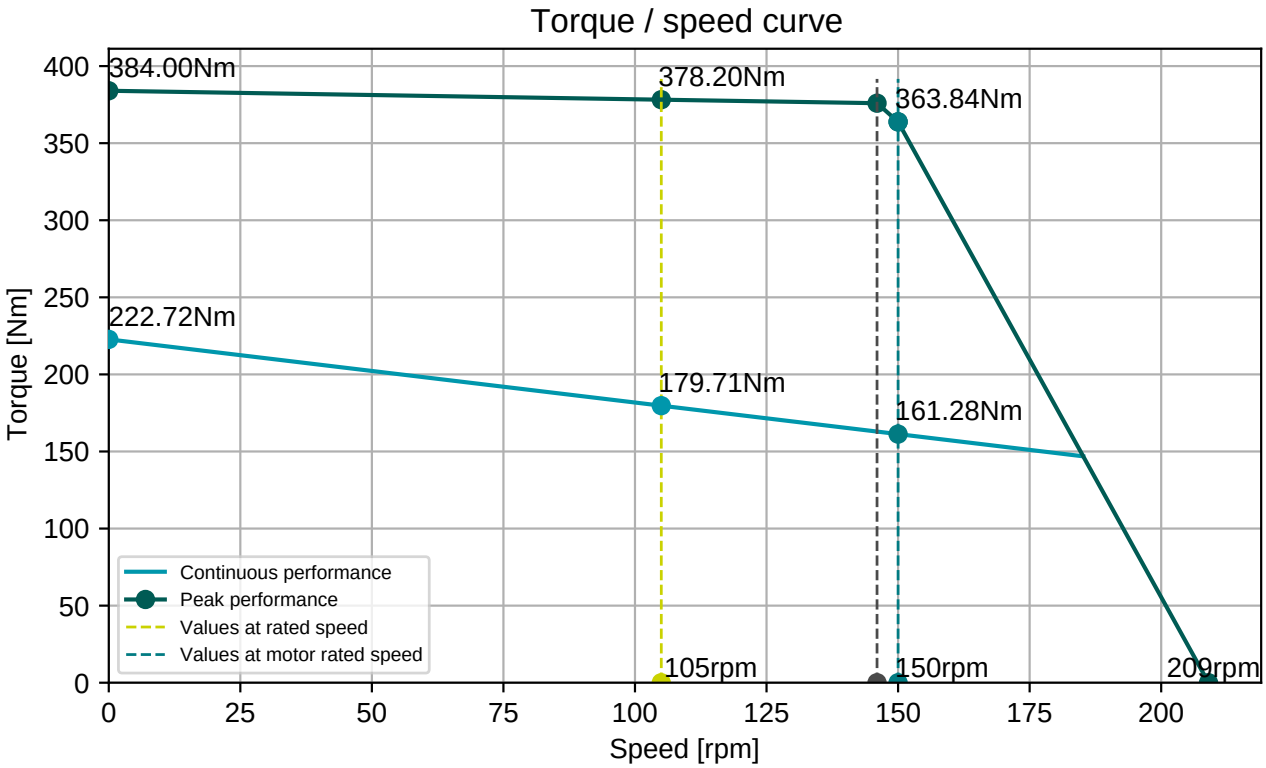

CA3102E36-3P-B-A232-F0

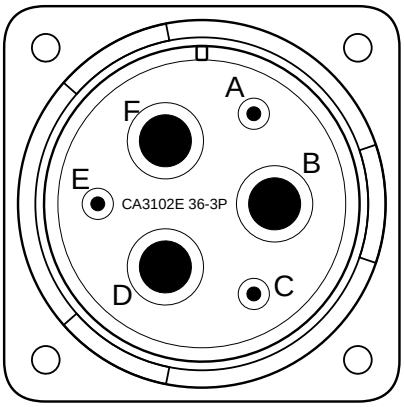

TVP00RW-11-35P
(D38999/20ZB35PN)

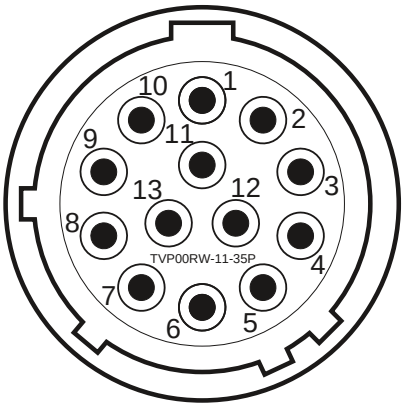

Connector 1 (552)	
A	GND
B	U
C	Brake+
D	V
E	Brake-
F	W

Connector 2 (520)	
1	Vcc
2	GND
3	DATA
4	DATA-
5	CLOCK
6	CLOCK-
7	Therm+
8	Therm-

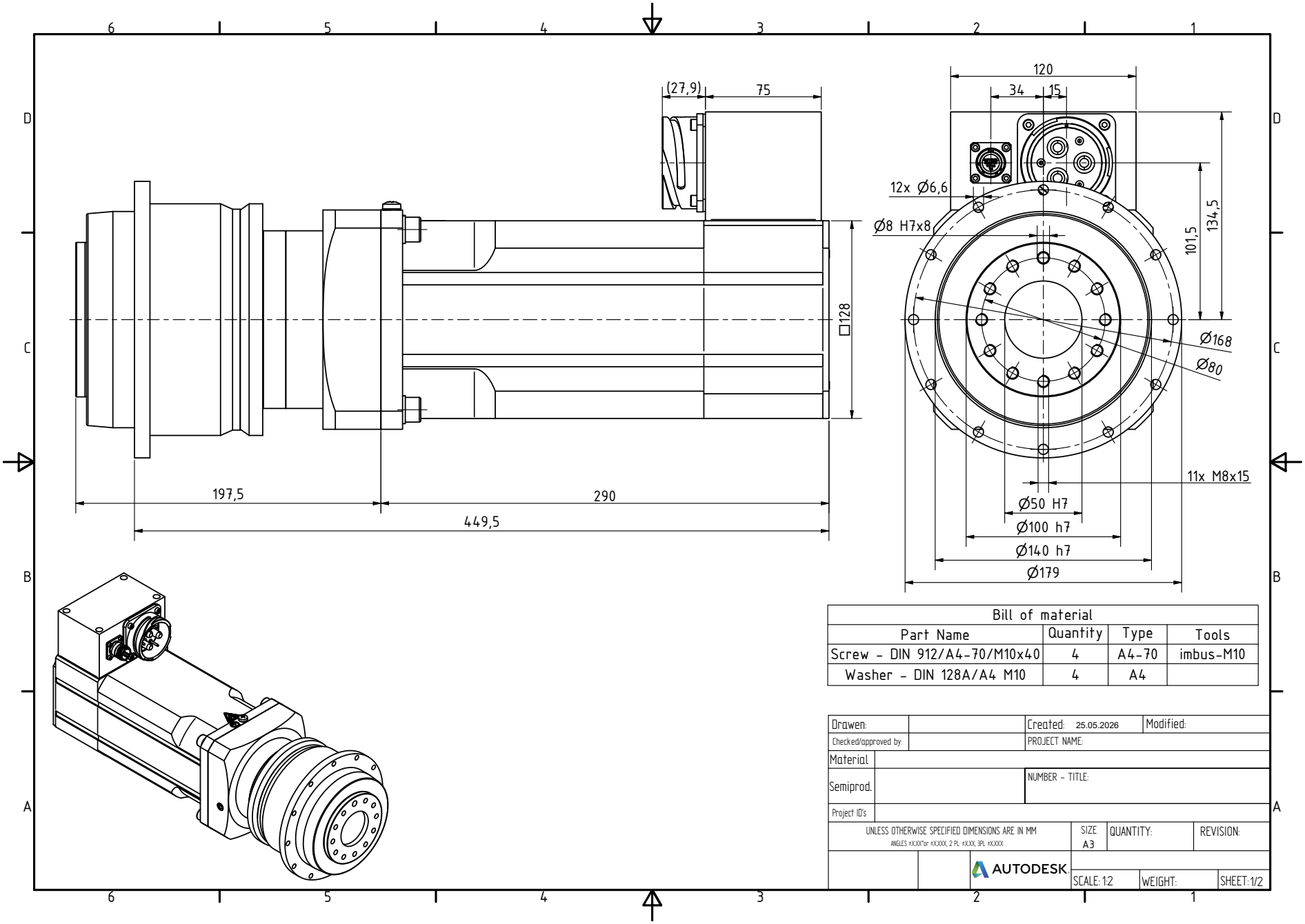

Bill of material			
Part Name	Quantity	Type	Tools
Screw - DIN 912/A4-70/M10x40	4	A4-70	imbus-M10
Washer - DIN 128A/A4 M10	4	A4	

Drawen:		Created: 25.05.2026	Modified:
Checked/approved by:		PROJECT NAME:	
Material			
Semiprod.		NUMBER - TITLE:	
Project ID's			
UNLESS OTHERWISE SPECIFIED DIMENSIONS ARE IN MM ANGLES ±XXX°or ±XXXX, 2 PL ±XXX, 3PL ±XXXX		SIZE A3	QUANTITY: REVISION:
AUTODESK		SCALE: 1:2	WEIGHT: SHEET: 1/2

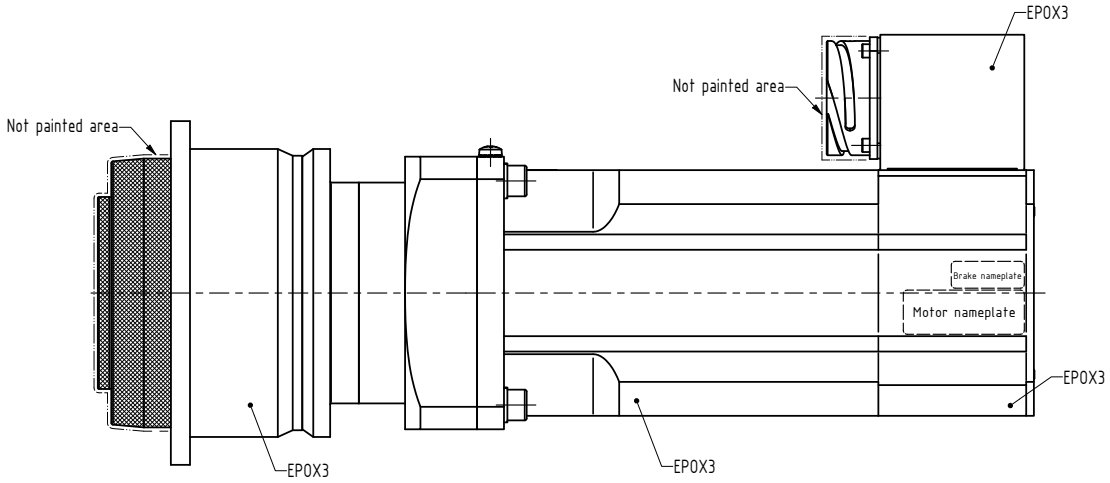

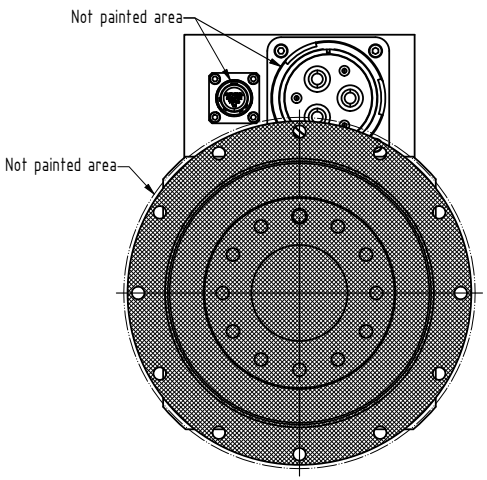

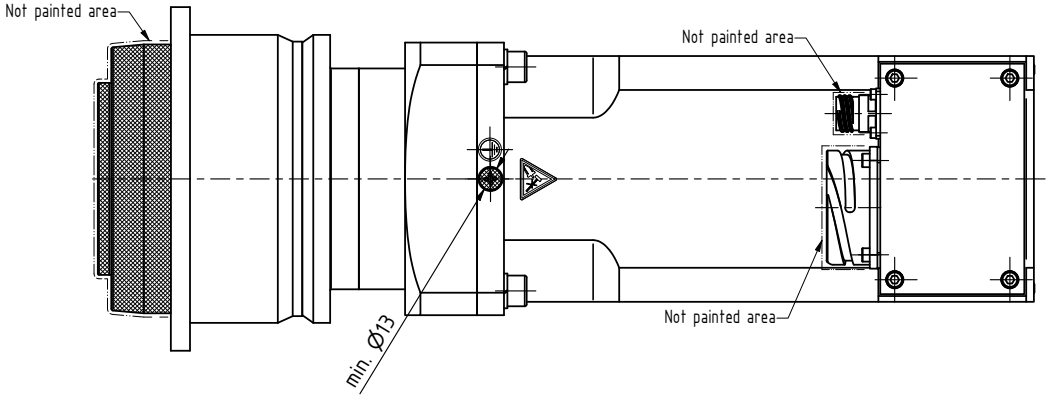

EPOX3 - LAYER THICKNESS

- Layer thickness 1. primer min. 40 µm
- Layer thickness 2. Primer min. 40 µm
- Layer thickness - top coat min. 40 µm

PRIMER FOR ALL NE- METALS AND PLASTICS OR PLASTIC LAMINATES AS WELL AS INTERMEDIATE PRIMER FOR ALL FE-METALS

Notice:

For special plastics and difficult aluminum substrates, an adhesion promoter is recommended in advance.

Solvent-based color

Paint System EP 101-20 EPM / corrosion protection primer			
	RAD No.:	Layer thickness: min. 40µ	Art.-No.: Streicolor
Color	C 2523 623	RAL 6013 reed green	EP 101-20 EPM-C / RAL 6013
Color	C 2523 623 -L	RAL 6013 reed green	71051S6013 (5kg)
Accelerator	C 2549 086	colorless	EP952-25 (H50.17)
Accelerator	C 2549 086 -G	colorless	748240000 (1kg)
Paint thinner	C 2550 074	colorless	V52.15
Paint thinner	C 2550 074 -L	colorless	740840000 (5L)

The minimum layer thickness must be maintained. In some parts layer thicknesses up to three times the minimum value is only permissible on complex geometric components.

Paint System PU240 - 10 / Topcoat matt			
	RAD No.:	Layer thickness: min. 40µ	Art.-No.: Streicolor
Color	W 2523 905	RAL 9005 Jetblack	PU240- 10/ RAL9005 matt.
Color	W 2523 905 -K	RAL 9005 Jetblack	739131419005 (4kg)
Accelerator	W 2549 088	Colorless	PU 960-45 (H40.02)
Accelerator	W 2549 088 –K	colorless	747240000 (1KG)
Paint thinner	W 2550 075	colorless	V53.01
Paint thinner	W 2550 075 –D	colorless	740910000 (1L)

Note:

During assembly, follow the installaton instructions.
For the flange connecton between the motor and gearbox, use the bolts and washers specified in the table:

Type designation	Diameter	Length	Property class	Number	SW [mm]	Tightening torque [Nm]	Threadlocker
DIN 912/A4-70/M10x40	10	40	A4-70	4	8 mm	47 Nm	Loctite 243
DIN 128A/A4/M10	10.5	-	A4	4	-	-	-

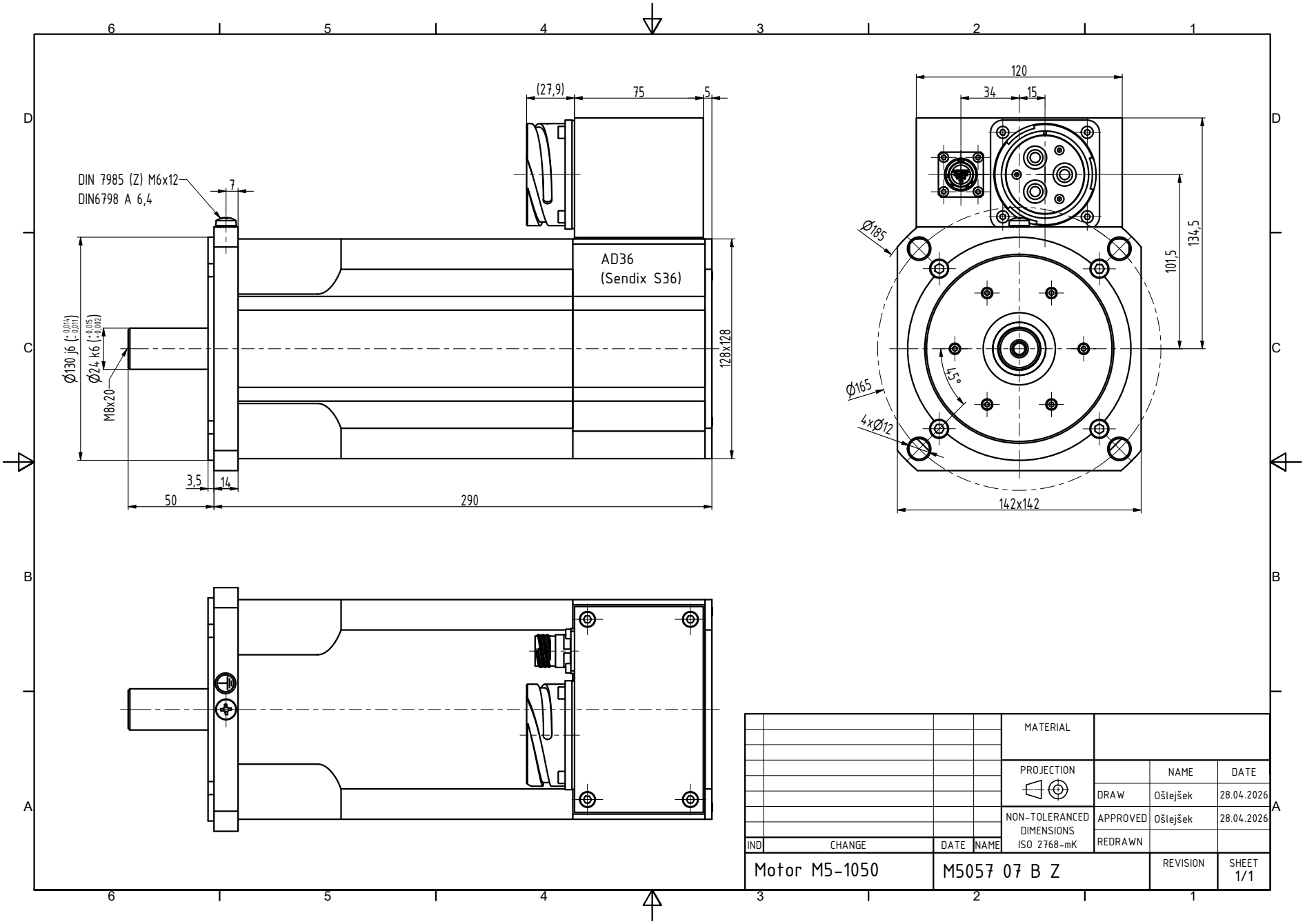
DIN 7985 (Z) M6x12
DIN6798 A 6,4
7
(27,9)
75
5
AD36
(Sendix S36)
Ø130 j6 (+0,014 -0,011)
Ø24 k6 (+0,015 +0,002)
M8x20
128x128
3,5
14
50
290
120
34
15
Ø185
101,5
134,5
45°
Ø165
4xØ12
142x142
MATERIAL
PROJECTION
NON-TOLERANCED DIMENSIONS ISO 2768-mK
IND
CHANGE
DATE
NAME
NAME
DATE
DRAW
Ošlejšek
28.04.2026
APPROVED
Ošlejšek
28.04.2026
REDRAWN
Motor M5-1050
M5057 07 B Z
REVISION
SHEET 1/1

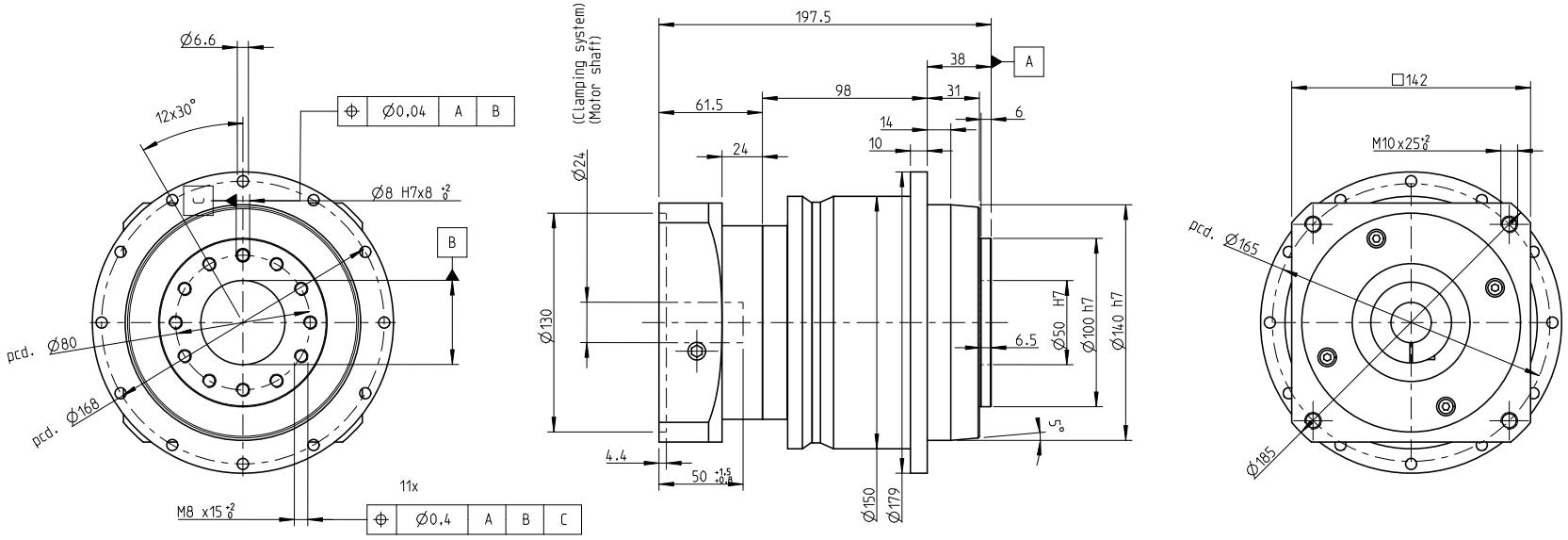

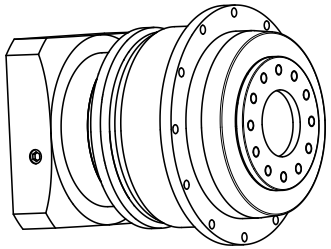

INDEX	ZMĚNA	DATUM	PODPIS		
ZM.MAT.		T.O.	HMOTNOST kg	MĚŘ.	
ROZM.-POLOT.					
ROZM. ZAŘ.			ČSN	TŘ.Č.	
VYPR.	NORM. REF.		POZN.	Č. KUSOVNÍKU	
PŘEKR.					
TECHNOL.	SCHVÁLIL.		STARÝ V.	Č.V.	
NÁZEV	Gearbox SGFN140		Listů	List	