Engineering motordata (WIN 711)		
DC bus voltage	560	V DC
Nominal AC voltage	380	V AC (rms)
Rated voltage	277	V AC (rms)
Rated power	1.9	kW
Rated speed	3000	rpm
Rated torque	6.10	Nm
Rated current	5.14	A (rms)
Peak torque	22.5	Nm
Peak current	23.8	A (rms)
Stall torque	7.5	Nm
Stall current	5.2	A (rms)
No load speed	4350	rpm
EMF constant ±10%	87	V AC (rms) / 1000rpm
Theoretical torque constant ±10%	1.44	Nm / A (rms)
Torque constant ±10% @ rated load	1.19	Nm / A (rms)
Number of poles	10	
Electrical time constant	5.90	ms
Winding terminal resistance	2.29	Ω
Rotary field terminal inductance	13.5	mH

Customs info	
HS Code	85015220

Mechanical motor data (setting 5)		
Max mechanical speed	9000	rpm
Mech. time constant	0.62	ms
Thermal time constant	30	min
Rotor inertia	3.26	kgcm²
Protection	IP64	
Color	RAL 9005	
Cooling	Convection	
Motor-only mass	4.7	kg

Sensors	
Temperature	PTC 111-K13 {PTC 111-K13 Reissmann}
Feedback	2-pole resolver (ER5Kd411, TS2620N21E11, RE-15-1-A15)

Brake		
Braking torque	9.00	Nm
Voltage	24	V DC
Power @20°C	18.0	W
Current @20°C	0.75	A
Inertia	0.60	kgcm²
Mass	0.82	kg

Gearbox engineering data		
Gear ratio	32	
Efficiency*	94	%
Torsional stiffness	25.5	Nm/arcmin
Number of stages	2	
Rated output torque	150	Nm
Cycling output torque	300	Nm
Max output torque	480	Nm
Emergency output torque	650	Nm
Rated input speed	3500	rpm
Max input speed	8500	rpm
Operating temperature	<-25; 90>	°C
Max. backlash	< 5	arcmin
Service life	20000	h

** at rated speed & torque*

Lubrication	
Type	Standard
Lubricant	Castrol Optigear Synthetic 800/150

Gearbox mechanical data		
Radial force for 20'000h*	6000	N
Axial force for 20'000h	8000	N
Output shaft design	Smooth shaft	
Mass	8.77	kg
Input inertia	1.967	kgcm²
Protection	IP65	

** Defined for point of action at ½ output shaft length*

Actuator data		
Rated speed	94	rpm
Rated torque	150.00	Nm
Cycling torque	300.00	Nm
Peak torque	480.00	Nm
Emergency stop torque	650.00	Nm
EMF constant ±10%	2784.0	V AC (rms) / 1000rpm
Torque constant ±10% @ rated load	35.70	Nm / A (rms)
Total mass	14.29	kg
Output inertia	5352.4	kgcm²

Torque / speed curve

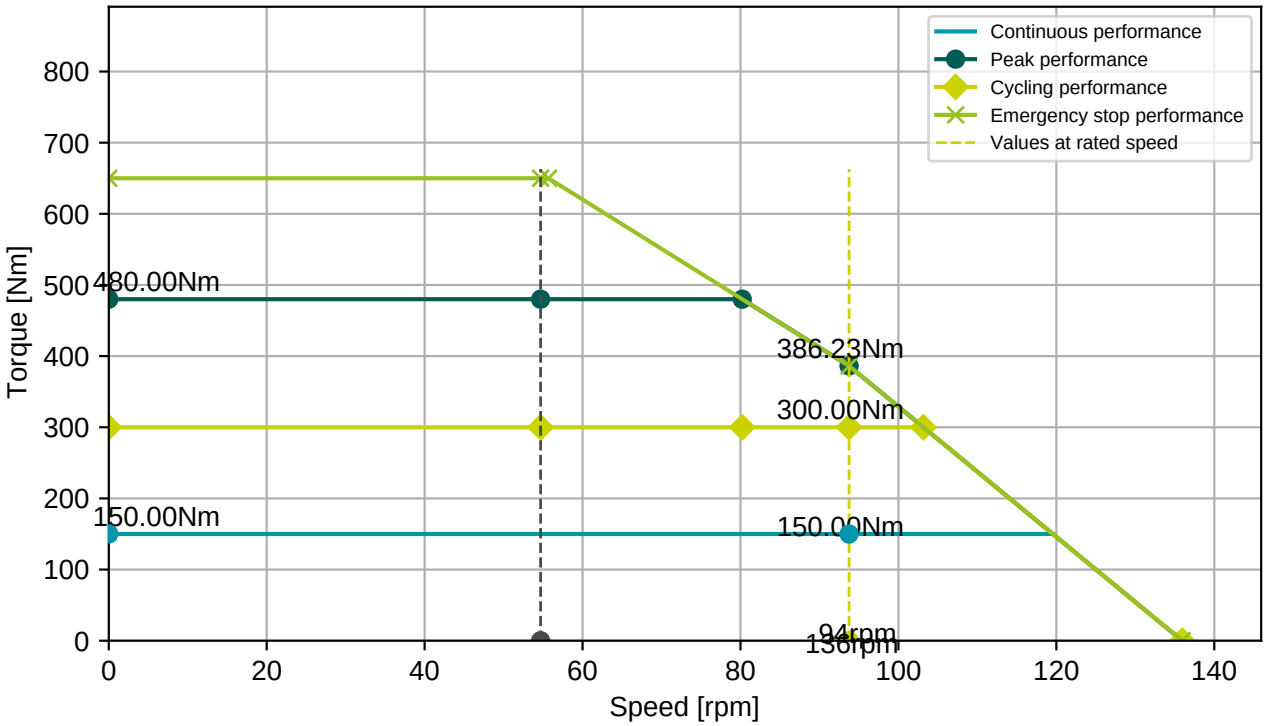

BGC110N00001216000
M23, 8 poles, rotary

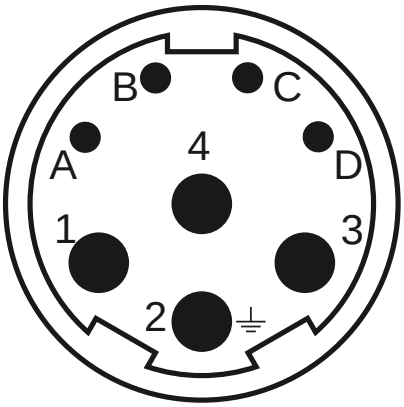

AGC052N00001215000
M23, 12 poles, rotary

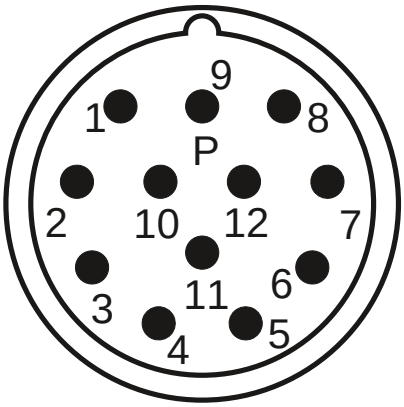

Connector 1 (9)	
1	U
4	V
3	W
2	PE
A	Brake+
B	Brake-
C	
D	

Connector 2 (10)	
2	Therm+
3	S4
4	S3
5	R2
6	Therm-
7	S2
8	S1
9	R1

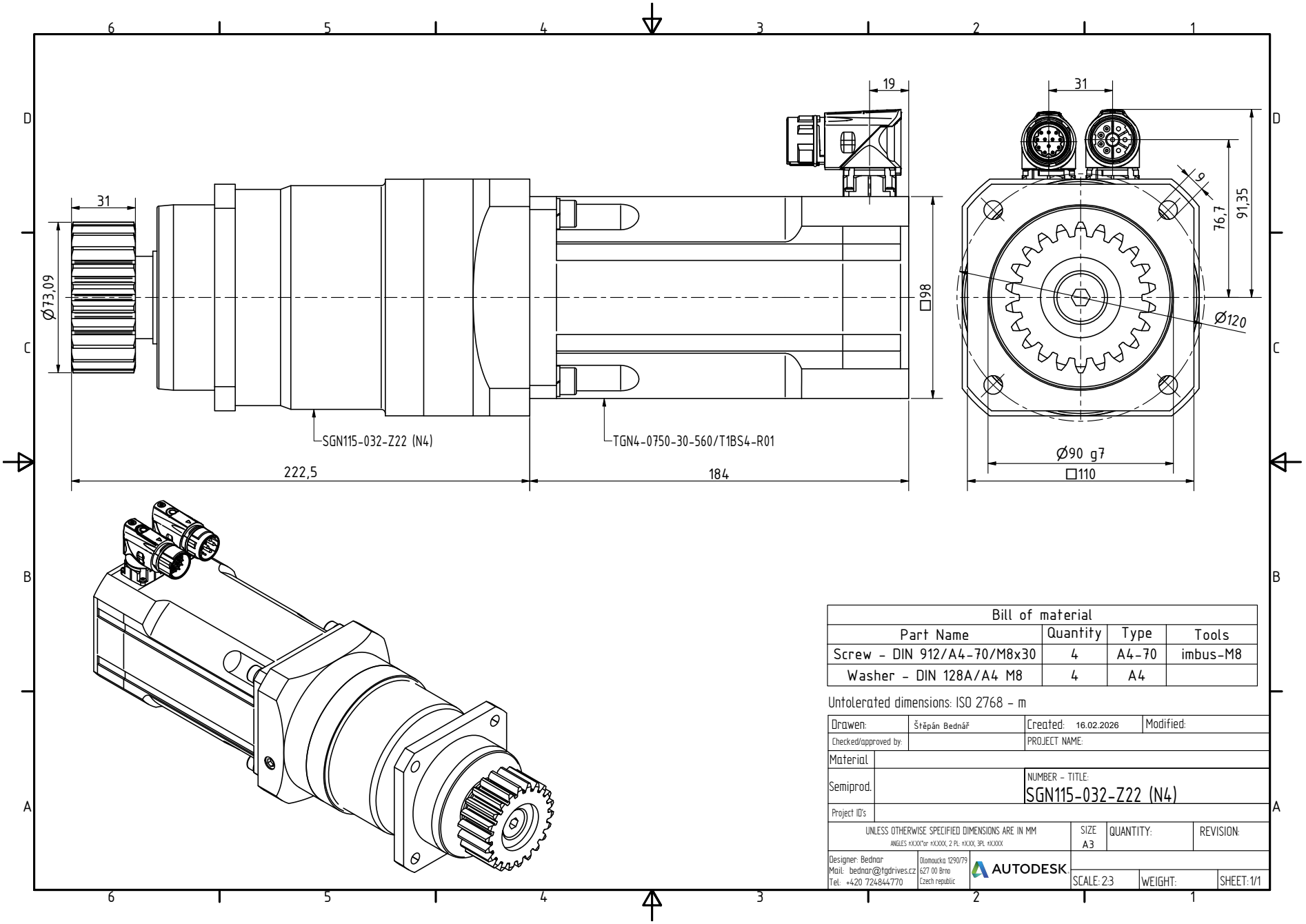

Bill of material			
Part Name	Quantity	Type	Tools
Screw - DIN 912/A4-70/M8x30	4	A4-70	imbus-M8
Washer - DIN 128A/A4 M8	4	A4	

Untolerated dimensions: ISO 2768 - m

Drawen:	Štěpán Bednář	Created: 16.02.2026	Modified:
Checked/approved by:		PROJECT NAME:	
Material			
Semiprod.		NUMBER - TITLE: SGN115-032-Z22 (N4)	
Project ID's			
UNLESS OTHERWISE SPECIFIED DIMENSIONS ARE IN MM ANGLES ±XXX°or ±XXXX, 2 PL ±XXX, 3PL ±XXXX		SIZE A3 / QUANTITY:	REVISION:
Designer: Bednar Mail: bednar@tgdrives.cz Tel: +420 724844770	Olomoucka 1290/79 627 00 Brno Czech republic	AUTODESK	SCALE: 2:3 / WEIGHT: / SHEET: 1/1

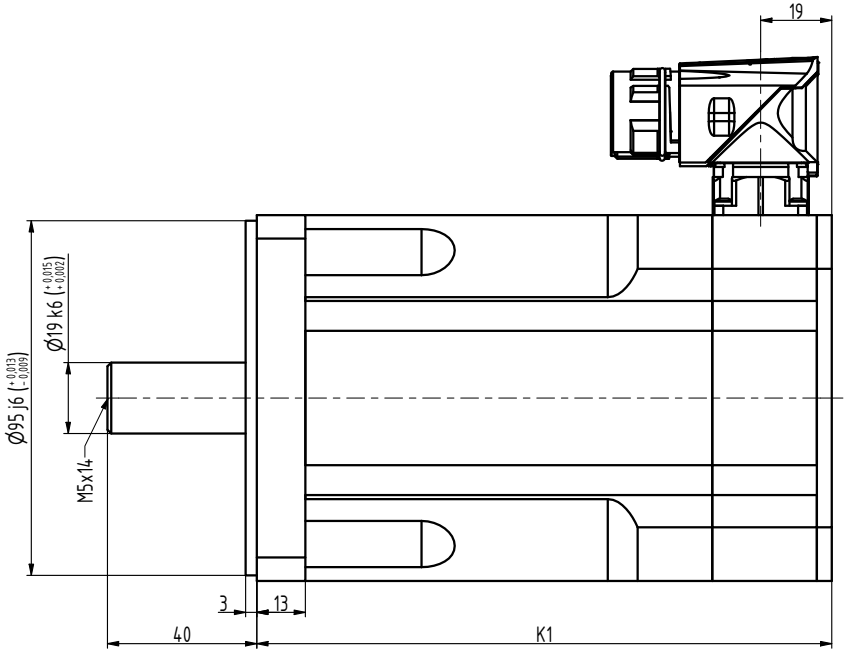

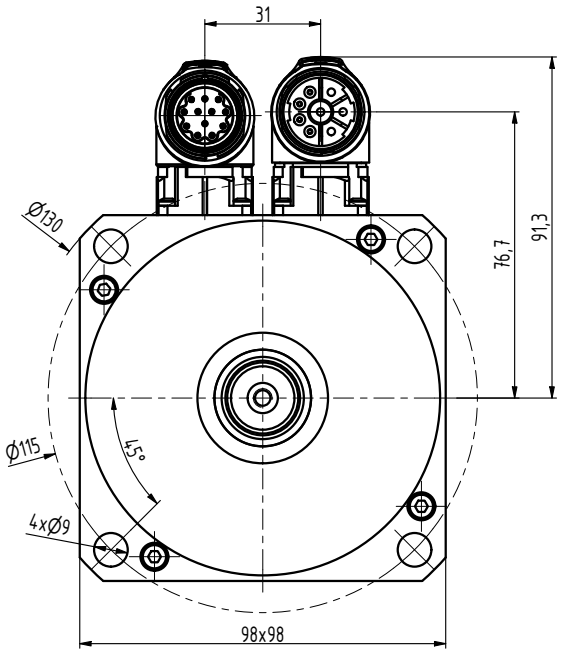

TYP	K1
N4-0340	139
N4-0510	154
N4-0750	184
N4-0960	214
N4-1130	244

INDEX	ZMĚNA	DATUM	PODPIS		
ZN.MAT.			T.O.	HMOTNOST kg	MĚŘ.
ROZM.-POLOT.					
POM. ZAŘ.				ČSN	TŘ.Č.
VYPR. Ošlejšek		NORM.REF.		POZN.	Č. KUSOVNÍKU
PŘEKR.					
TECHNOL.		SCHVÁLIL Ošlejšek	12.02.2024	STARÝ V.	Č.V.
NÁZEV	Motor N4			N4083 00 B Z_S4_S1	
				Listů	List

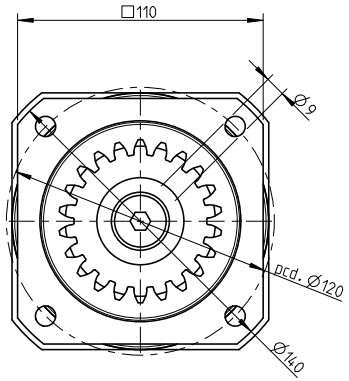

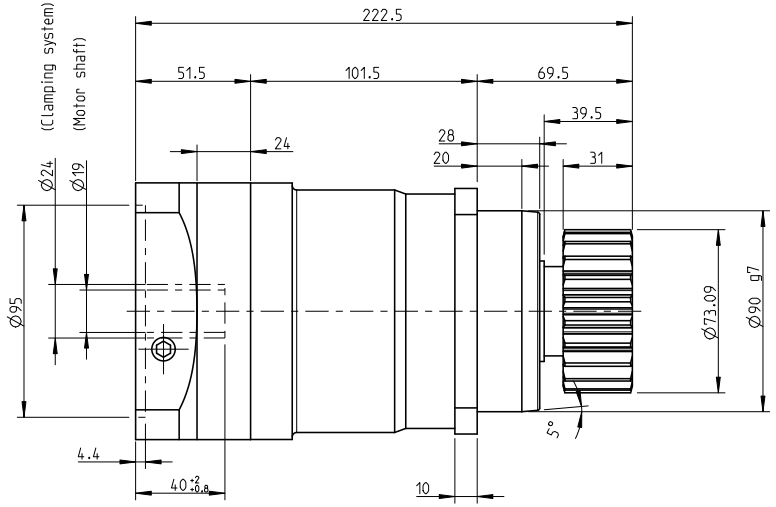

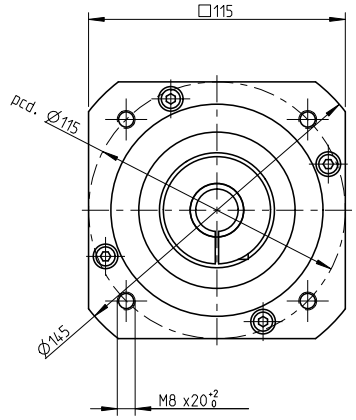

Center distance a in mm:

$a = h_0 + \frac{d_w}{2}$

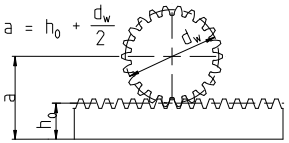

Pinion data	Character	Unit	
Module	m_n	mm	3
Number of teeth	z_p	-	22
Helix angle	beta	°	0
Flank direction	R	-	straight
Pitch circle diameter	d_0	mm	66
Profile modification factor	x	-	0.2
Operating pitch circle diameter (7)	d_w	mm	67.2
Quality	Q	-	6
Max. feed force (6)	F_V	N	12030
Max. feed speed	v	m/min	55
Pinion weight	m_p	kg	0.71
Mass moment of inertia of pinion	J_p	kgcm²	4.58

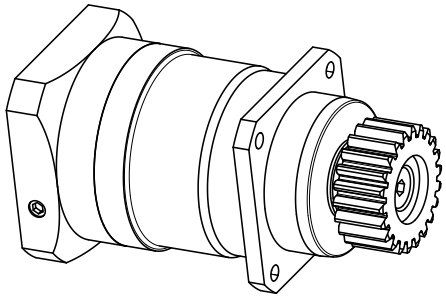

INDEX	ZMĚNA	DATUM	PODPIS		
ZM.MAT.		T.O.	HMOTNOST kg	MĚŘ.	
ROZM.-POLOT.					
ROZM. ZAŘ.			ČSN	TŘ.Č.	
VYPR.	NORM. REF.		POZN.	Č. KUSOVNÍKU	
PŘEKR.					
TECHNOL.	SCHVÁLIL.	12.9.2020	STARÝ V.	Č.V.	

NÁZEV

Gearbox SGN115

TGN4, TGH4, TGT4

Listů List