Engineering data (WIN -100027)		
DC bus voltage	450	V DC
Nominal AC voltage	280	V AC (rms)
Rated voltage	196	V AC (rms)
Rated power	361	W
Rated speed	3000	rpm
Rated torque	1.15	Nm
Rated current	1.35	A (rms)
Peak torque	5.2	Nm
Peak current	6.14	A (rms)
Stall torque	1.3	Nm
Stall current	1.43	A (rms)
No load speed	5060	rpm
EMF constant ±10%	55	V AC (rms) / 1000rpm
Theoretical torque constant ±10%	0.91	Nm / A (rms)
Torque constant ±10% @ rated load	0.85	Nm / A (rms)
Number of poles	6	
Electrical time constant	1.74	ms
Winding terminal resistance	16.99	Ω
Rotary field terminal inductance	29.6	mH

Certifications & customs info	
HS Code	85015100
UL isolation	Certified

Mechanical data (setting 29)		
Max mechanical speed	9000	rpm
Mech. time constant	2.31	ms
Thermal time constant	30	min
Rotor inertia	0.65	kgcm²
Protection	IP64	
Color	RAL 9005	
Cooling	Convection	
Motor-only mass	4	kg

Sensors	
Temperature	PT1000 {PT1000}
Feedback 1	DFS60B, 1024 imp./rev.
Feedback 2	ECN1325 (EnDat3) single-turn, 25 bits/rev.

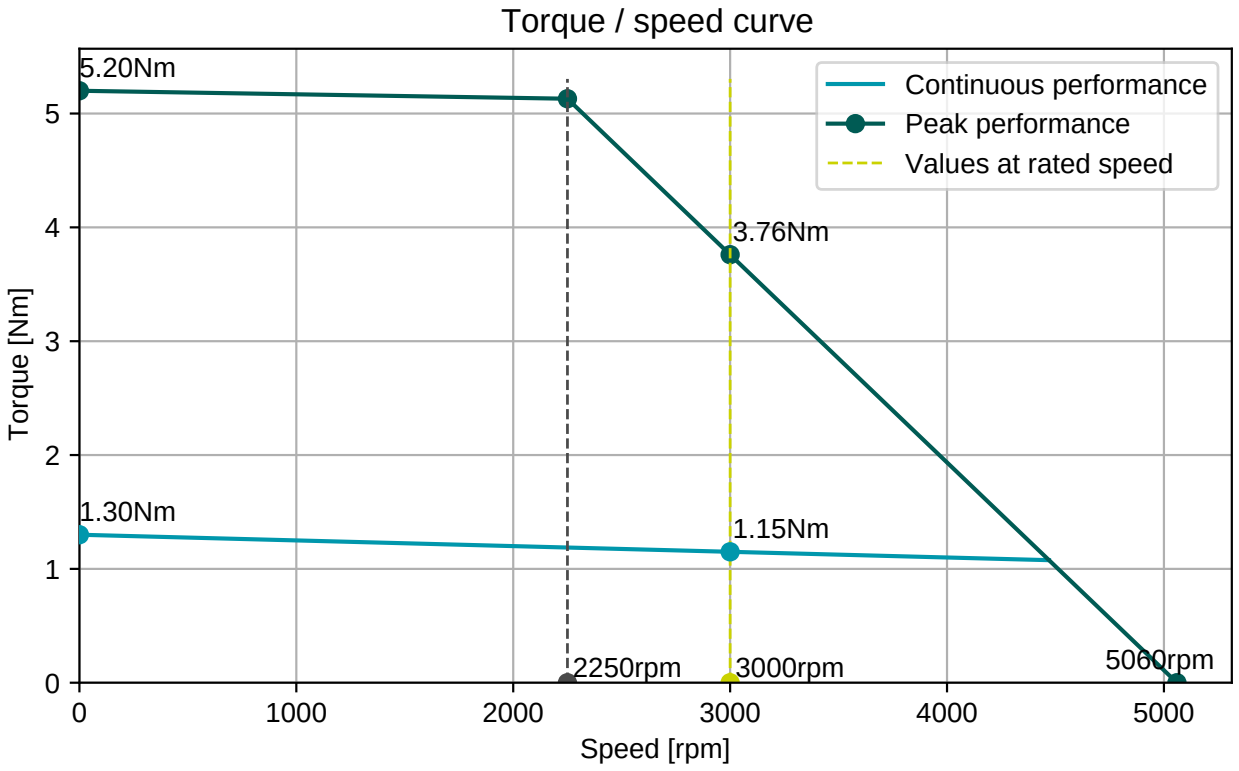
Torque / speed curve
Continuous performance
Peak performance
Values at rated speed
5.20Nm
3.76Nm
1.30Nm
1.15Nm
2250rpm
3000rpm
5000rpm
Torque [Nm]
Speed [rpm]
0
1
2
3
4
5
0
1000
2000
3000
4000
5000

BGC110N00001216000

M23, 8 poles, rotary

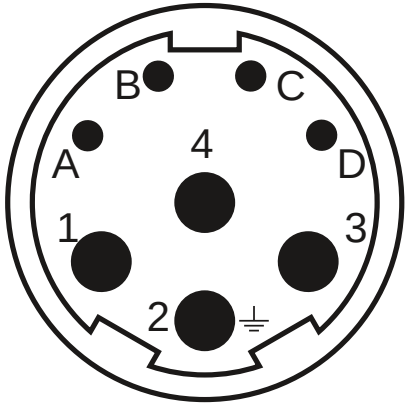

Connector 1 (9)	
1	U
4	V
3	W
2	PE
A	Brake+
B	Brake-
C	
D	

AGC052N00001215000

M23, 12 poles, rotary

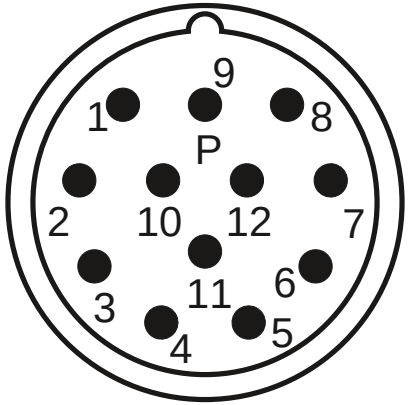

Connector 2 (525)	
6	A-
5	A
1	B-
8	B
4	Z-
3	Z
10	GND
12	+Us

AGC052N00001215000

M23, 12 poles, rotary

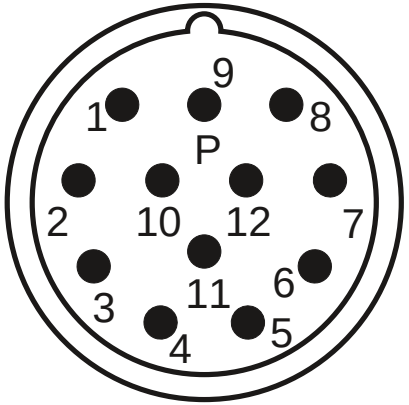

Connector 3 (526)	
1	P_SD+
2	P_SD-
7	Therm+
8	Therm-

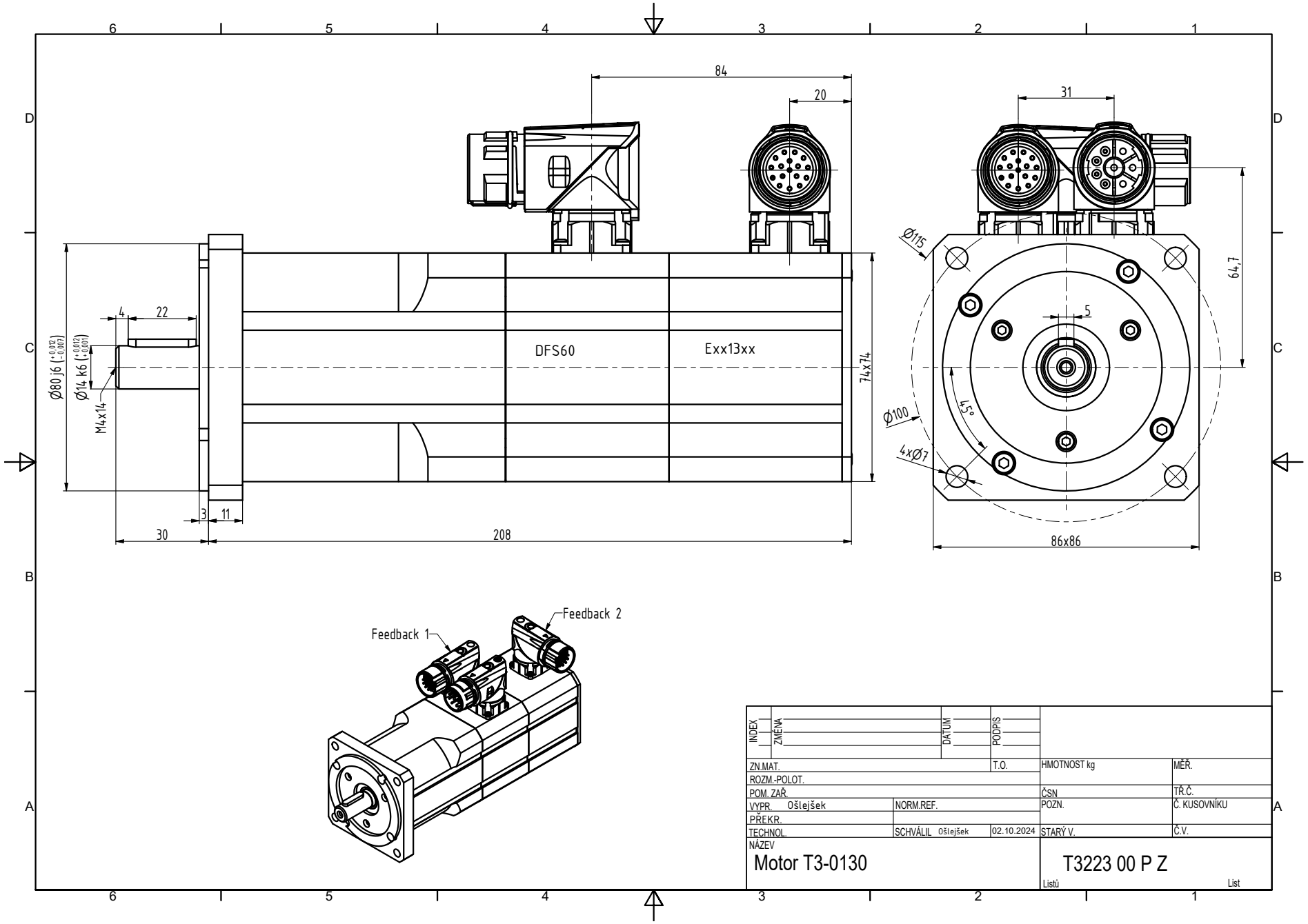

INDEX	ZMĚNA	DATUM	PODPIS		
ZN.MAT.		T.O.	HMOTNOST kg	MĚŘ.	
ROZM.-POLOT.					
POM. ZAŘ.			ČSN	TŘ.Č.	
VYPR. Ošlejšek	NORM.REF.		POZN.	Č. KUSOVNÍKU	
PŘEKR.					
TECHNOL.	SCHVÁLIL Ošlejšek	02.10.2024	STARÝ V.	Č.V.	

NÁZEV

Motor T3-0130

T3223 00 P Z

Listů List