Engineering data (WIN 1160)		
DC bus voltage	560	V DC
Nominal AC voltage	380	V AC (rms)
Rated voltage	276	V AC (rms)
Rated power	1.3	kW
Rated speed	250.0	mm/s
Rated force	4750	N
Rated current	3.94	A (rms)
Peak force	16400	N
Peak current	17.4	A (rms)
Stall force	5768	N
Stall current	3.81	A (rms)
No load speed	387.5	mm/s
Screw static load rating	32740	N
Screw dynamic load rating	16400	N
EMF constant ±10%	0.97	V AC (rms) / (mm/s)
Theoretical force constant ±10%	1516	N/A (rms)
Force constant ±10% @ rated load	1206	N/A (rms)
Number of poles	10	
Electrical time constant	5.45	ms
Winding terminal resistance	3.98	Ω
Rotary field terminal inductance	21.7	mH

Values defined at 20°C

Customs info	
HS Code	85015220

Mechanical data (setting 5)		
Screw lead	5	mm
Min. stroke	30	mm
Max. stroke	150	mm
Max mechanical speed	750.0	mm/s
Mech. time constant	0.78	ms
Thermal time constant	25	min
Rotor inertia	2.04	kgcm²
Protection	IP64	
Color	RAL 9005	
Cooling	Convection	
Motor-only mass	4.7	kg
Screw mass	0.28	kg
Actuator mass*	4.98	kg

** Total rotor and screw mass*

Sensors	
Temperature	PT1000 - length 500mm {PT1000}
Feedback	2-pole resolver (ER5Kd411, TS2620N21E11, RE-15-1-A15)

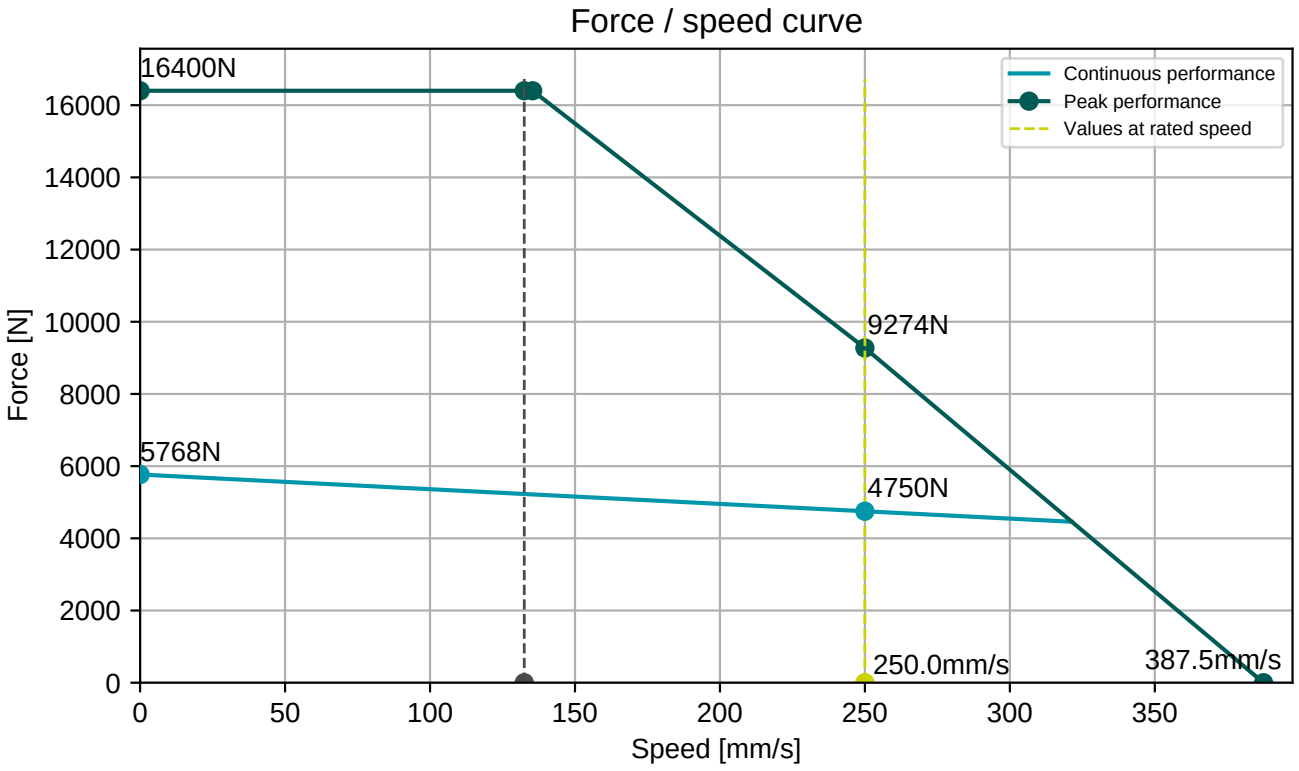

Connector 1 (33)	
white	U
blue	V
red	W
PE	PE

2x Therm
2x Brake

Connector 2 (32)	
red-white	R1
black-white	R2
yellow-white	R2)
red	S1
yellow	S2
black	S3
blue	S4

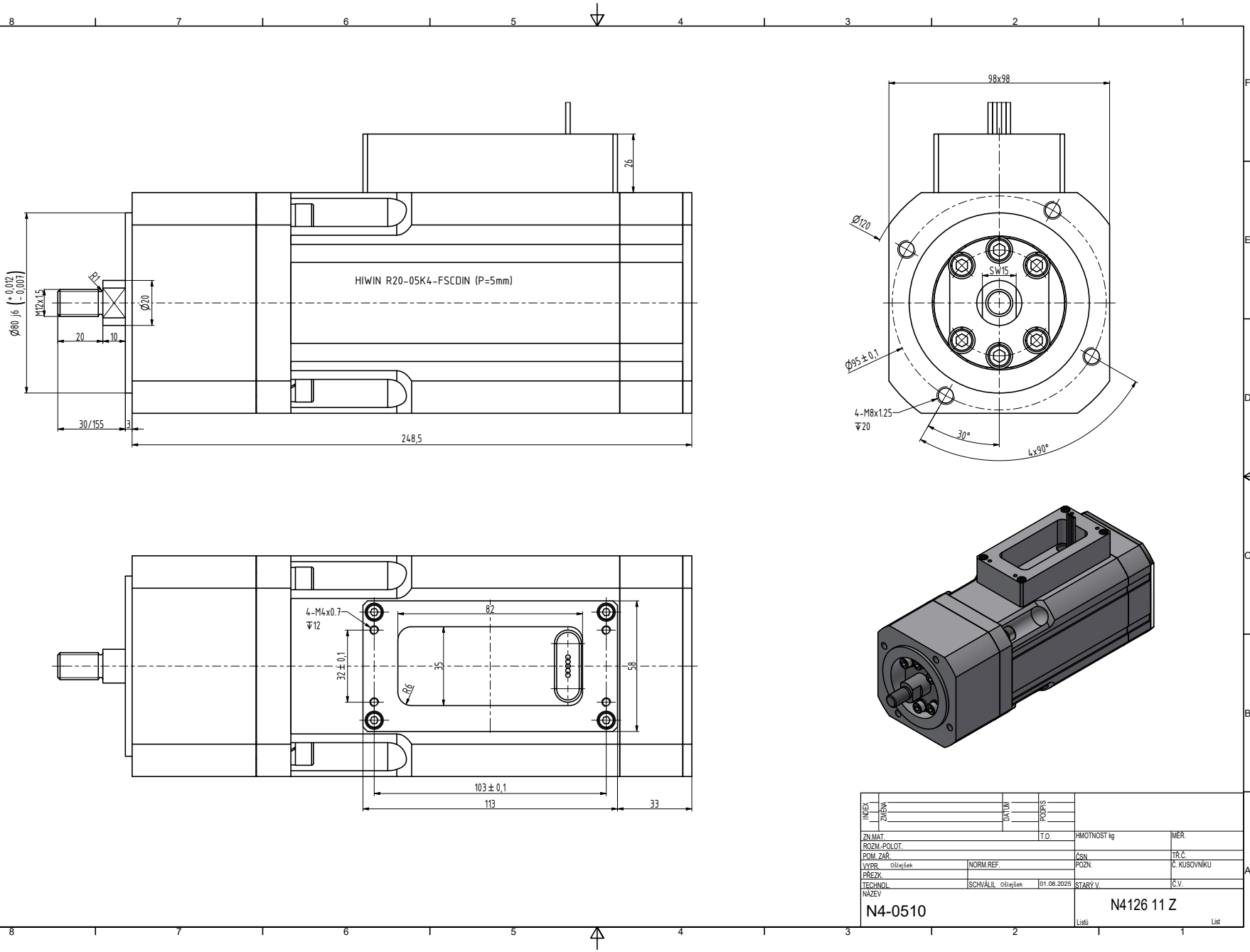

INDEX	ZMĚNA	DATUM	PODPIS
ZN.MAT.		T.O.	HMOTNOST kg	MĚR.
ROZM.-POLOT.				
POM. ZAŘ.			ČSN	TŘ.Č.
VYPR. OšlejŠek	NORM.REF.		POZN.	Č. KUSOVNÍKU
PŘEZK.				
TECHNOL.	SCHVÁLIL OšlejŠek	01.08.2025	STARÝ V.	Č.V.
NÁZEV	N4-0510		N4126 11 Z	
			Listů	List