Engineering data (WIN 1606)		
DC bus voltage	560	V DC
Nominal AC voltage	380	V AC (rms)
Rated voltage	245	V AC (rms)
Rated power	1.7	kW
Rated speed	8000	rpm
Rated torque	2.00	Nm
Rated current	4.46	A (rms)
Peak torque	10.5	Nm
Peak current	24.2	A (rms)
Stall torque	3.5	Nm
Stall current	6.7	A (rms)
No load speed	12050	rpm
EMF constant ±10%	31.5	V AC (rms) / 1000rpm
Theoretical torque constant ±10%	0.521	Nm / A (rms)
Torque constant ±10% @ rated load	0.448	Nm / A (rms)
Number of poles	10	
Electrical time constant	2.89	ms
Winding terminal resistance	1.122	Ω
Rotary field terminal inductance	3.24	mH

Customs info	
HS Code	85015220

Mechanical data (setting 29)		
Max mechanical speed	12000	rpm
Mech. time constant	0.74	ms
Thermal time constant	27	min
Rotor inertia	1.04	kgcm²
Protection	IP64	
Color	RAL 9005	
Cooling	Convection	
Max. axial force 20kh	54	N
Max. radial force 20kh*	283	N
Max. axial force 100kh	32	N
Max. radial force 100kh*	166	N

** Defined for point of action at ½ output shaft length*

Sensors	
Temperature	PT1000 {PT1000}
Feedback	ECI1119 (EnDat 2.2) single-turn, 19 bits

Torque / speed curve

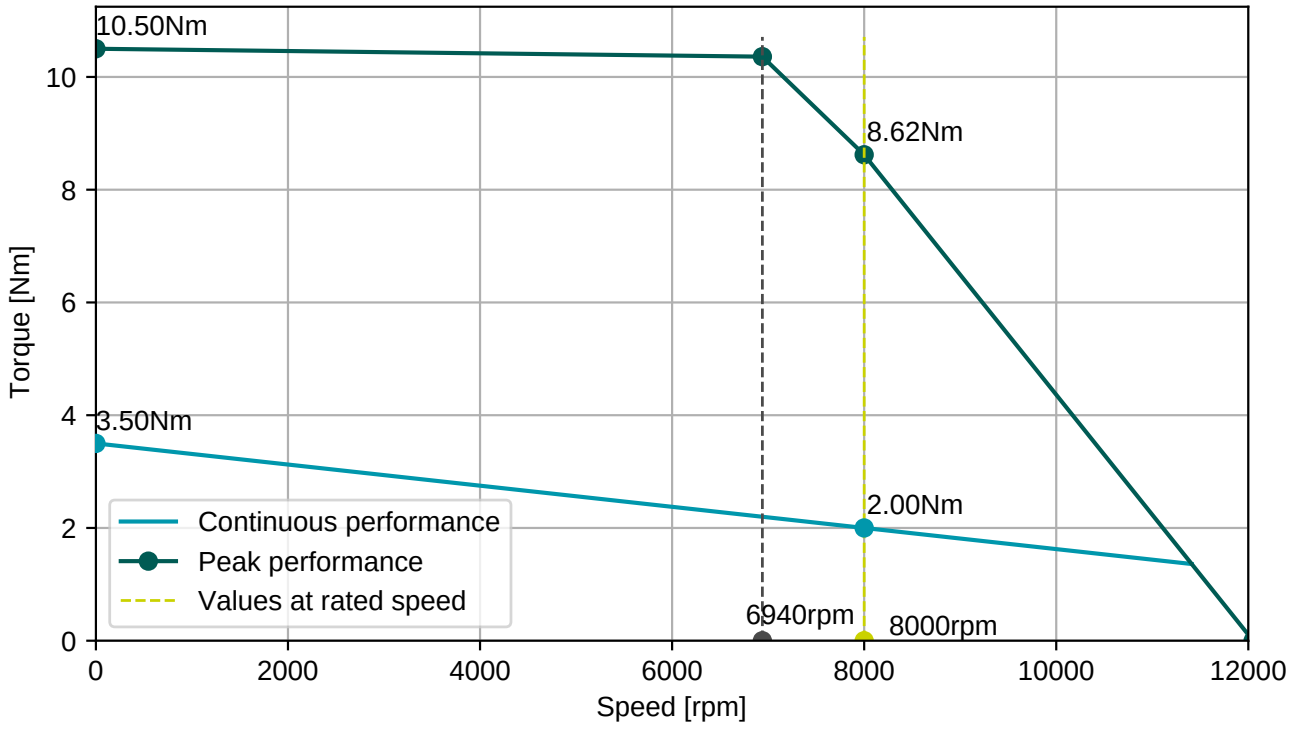

BGC110N00001216000
M23, 8 poles, rotary

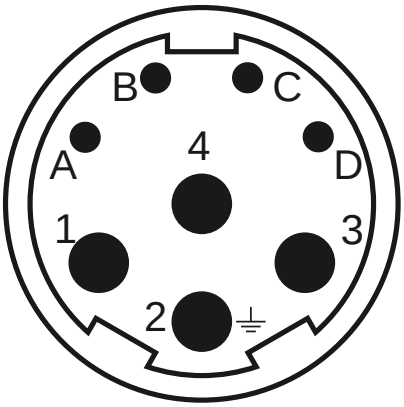

AGC052N00001215000
M23, 12 poles, rotary

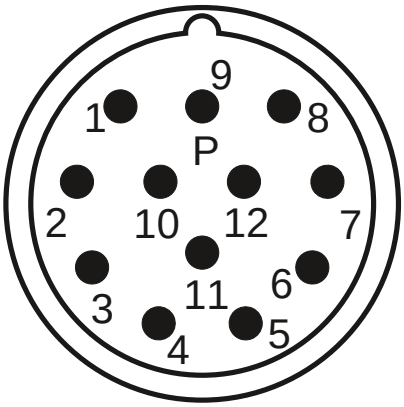

Connector 1 (9)	
1	U
4	V
3	W
2	PE
A	Brake+
B	Brake-
C	
D	

Connector 2 (293)	
1	Vcc (+5V)
2	GND
3	DATA
4	DATA-
5	CLOCK
6	CLOCK-
7	Therm+
8	Therm-
9	Vcc sensor
10	GND sensor

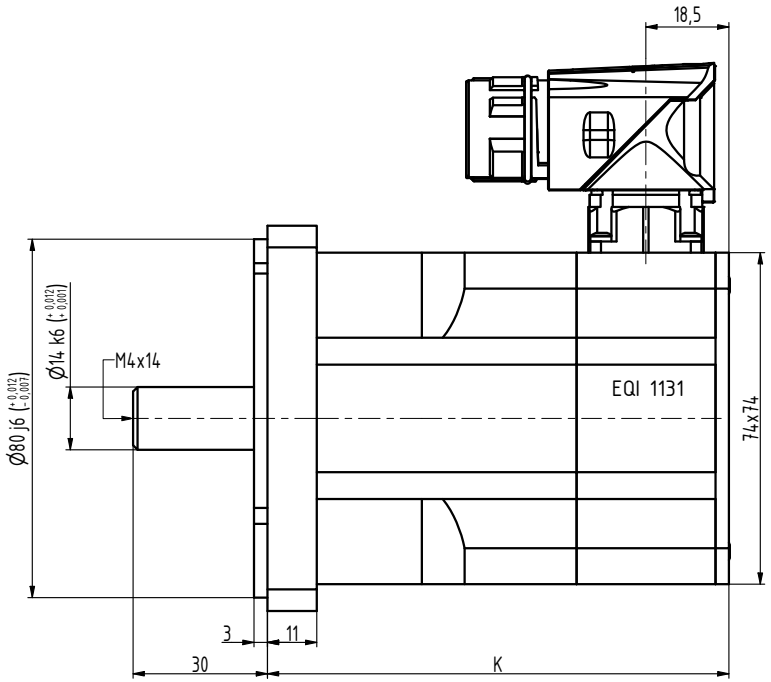

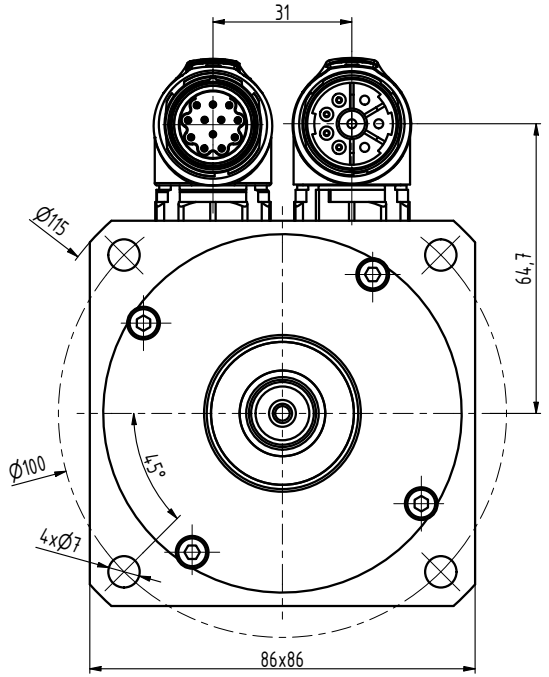

TYP	K
N3-0115	85
N3-0205	103
N3-0280	121
N3-0350	139
N3-0420	157
N3-0480	175

INDEX	ZMĚNA	DATUM	PODPIS		
ZN.MAT.			T.O.	HMOTNOST kg	MĚŘ.
ROZM.-POLOT.					
POM. ZAŘ.				ČSN	TŘ.Č.
VYPR. Ošlejšek		NORM.REF.		POZN.	Č. KUSOVNÍKU
PŘEKR.					
TECHNOL.		SCHVÁLIL Ošlejšek	02.05.2020	STARÝ V.	Č.V.
NÁZEV	Motor N3			N3147 01 Z_S4_S1	
				Listů	List