Engineering data (WIN 825)		
DC bus voltage	560	V DC
Nominal AC voltage	380	V AC (rms)
Rated voltage	168	V AC (rms)
Rated power	1.9	kW
Rated speed	9000	rpm
Rated torque	2.00	Nm
Rated current	9.54	A (rms)
Peak torque	15.3	Nm
Peak current	63.7	A (rms)
Stall torque	5.1	Nm
Stall current	14	A (rms)
No load speed	17220	rpm
EMF constant ±10%	22	V AC (rms) / 1000rpm
Theoretical torque constant ±10%	0.36	Nm / A (rms)
Torque constant ±10% @ rated load	0.21	Nm / A (rms)
Number of poles	10	
Electrical time constant	5.33	ms
Winding terminal resistance	0.3	Ω
Rotary field terminal inductance	1.6	mH

Customs info	
HS Code	85015220

Mechanical data (setting 29)		
Max mechanical speed	9000	rpm
Mech. time constant	0.80	ms
Thermal time constant	25	min
Rotor inertia	2.04	kgcm²
Protection	IP64	
Color	RAL 9005	
Cooling	Convection	
Max. axial force 20kh	78	N
Max. radial force 20kh*	413	N
Max. axial force 100kh	46	N
Max. radial force 100kh*	241	N

** Defined for point of action at ½ output shaft length*

Sensors	
Temperature	PT1000 {PT1000}
Feedback	ECI1119 (EnDat 2.2) single-turn, 19 bits

Torque / speed curve

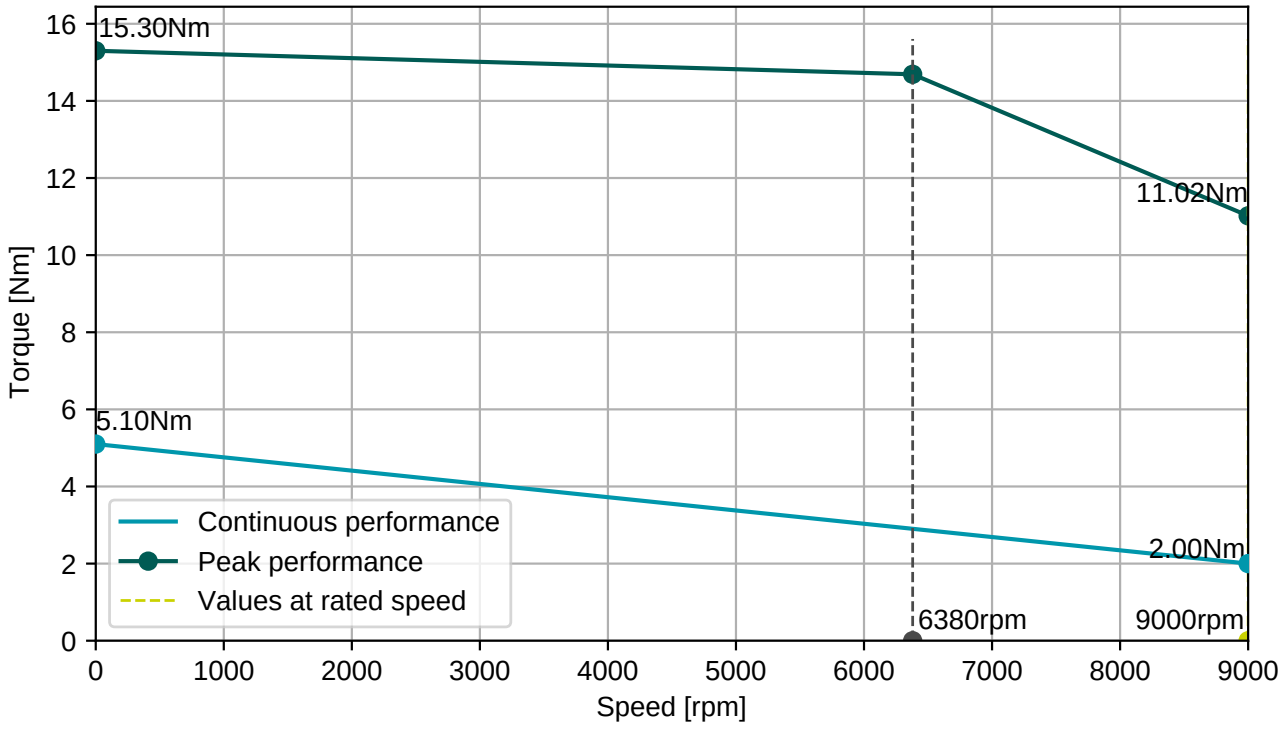

BGC110N00001216000
M23, 8 poles, rotary

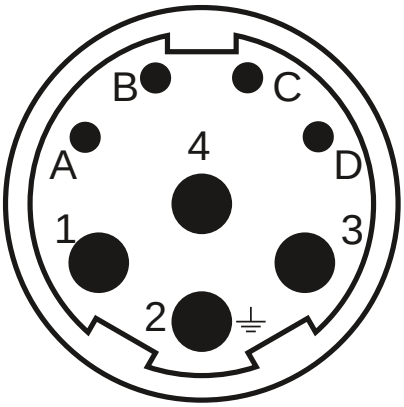

AGC052N00001215000
M23, 12 poles, rotary

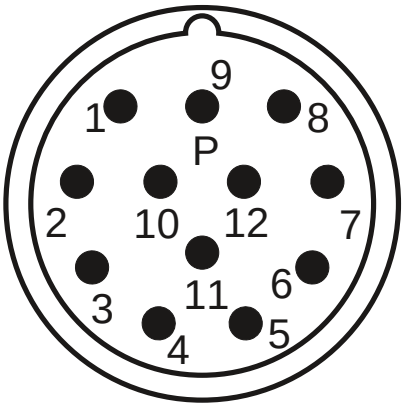

Connector 1 (9)	
1	U
4	V
3	W
2	PE
A	Brake+
B	Brake-
C	
D	

Connector 2 (293)	
1	Vcc (+5V)
2	GND
3	DATA
4	DATA-
5	CLOCK
6	CLOCK-
7	Therm+
8	Therm-
9	Vcc sensor
10	GND sensor

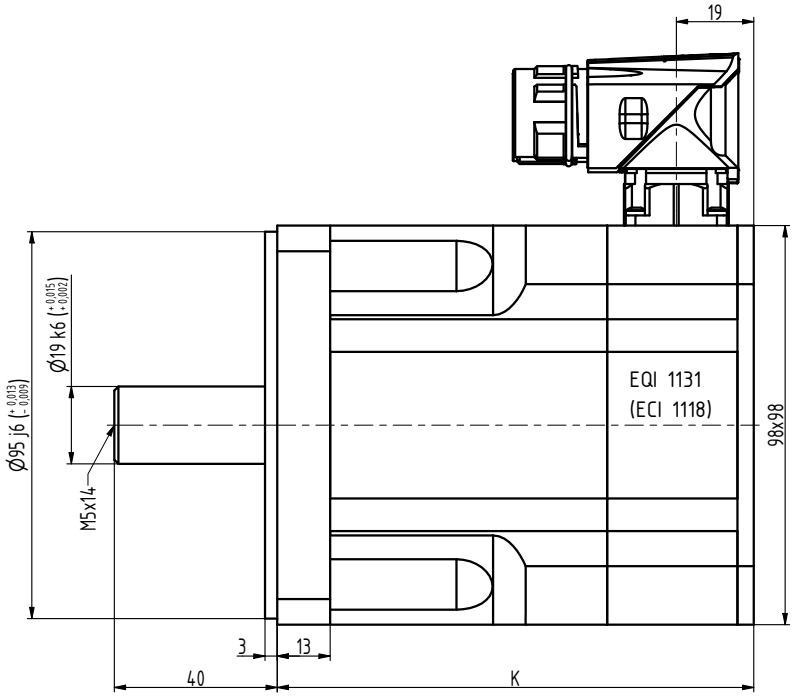

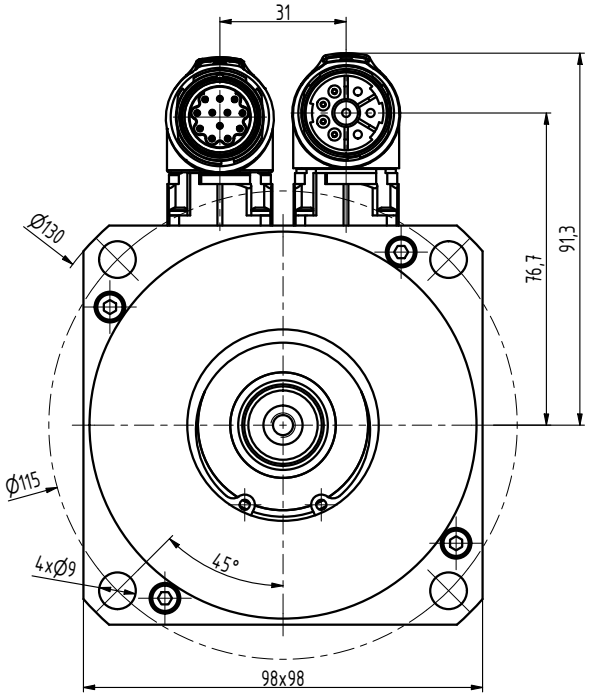

TYP	K
N4-0340	102
N4-0510	117
N4-0750	147
N4-0960	177
N4-1130	207

INDEX	ZMĚNA	DATUM	PODPIS		
ZN.MAT.			T.O.	HMOTNOST kg	MĚŘ.
ROZM.-POLOT.					
POM. ZAŘ.				ČSN	TŘ.Č.
VYPR. Ošlejšek		NORM.REF.		POZN.	Č. KUSOVNÍKU
PŘEKR.					
TECHNOL.		SCHVÁLIL Ošlejšek	26.05.2023	STARÝ V.	Č.V.
NÁZEV	Motor N4			N4163 01 Z_S4_S1	
				Listů	List