Engineering motordata (WIN 1773)		
DC bus voltage	54	V DC
Nominal AC voltage	38	V AC (rms)
Rated voltage	29	V AC (rms)
Rated power	788	W
Rated speed	3500	rpm
Rated torque	2.15	Nm
Rated current	17.8	A (rms)
Peak torque	8.1	Nm
Peak current	79.78	A (rms)
Stall torque	3.1	Nm
Stall current	24.92	A (rms)
No load speed	5050	rpm
EMF constant ±10%	7.5	V AC (rms) / 1000rpm
Theoretical torque constant ±10%	0.12	Nm / A (rms)
Torque constant ±10% @ rated load	0.12	Nm / A (rms)
Number of poles	10	
Electrical time constant	4.39	ms
Winding terminal resistance	0.066	Ω
Rotary field terminal inductance	0.29	mH

Customs info	
HS Code	85015220

Mechanical motor data (setting 30)		
Max mechanical speed	9000	rpm
Mech. time constant	1.24	ms
Thermal time constant	35	min
Rotor inertia	1.67	kgcm²
Protection	IP65	
Color	EPOX3 (RAL 9005)	
Cooling	Convection	

Sensors	
Temperature	PT1000 {PT1000}
Feedback	AD36/1222AF.0CBEB (Biss-C, multi-turn 12+22 bits, 5VDC)

Brake		
Braking torque	5.00	Nm
Voltage	24	V DC
Power @20°C	18.8	W
Current @20°C	0.78	A
Inertia	0.14	kgcm²
Mass	0.90	kg

Gearbox engineering data		
Gear ratio	64	
Efficiency*	87	%
Torsional stiffness	10.4	Nm/arcmin
Number of stages	2	
Rated output torque	80	Nm
Max output torque	128	Nm
Emergency output torque	200	Nm
Rated input speed	4000	rpm
Max input speed	9000	rpm
Operating temperature	<-40; 50>	°C
Max. backlash	< 1	arcmin
Service life	20000	h

** at rated speed & torque*

Lubrication	
Type	Low temperature
Lubricant	Klübersynth GH 6-32

Gearbox mechanical data		
Max. radial force*	4500	N
Max. axial force	5500	N
Output shaft design	Shaft key	
Mass	4.5	kg
Input inertia	0.557	kgcm²
Protection	IP65	

** Defined for point of action at ½ output shaft length*

Actuator data		
Rated speed	55	rpm
Rated torque	80.00	Nm
Peak torque	128.00	Nm
Emergency stop torque	200.00	Nm
EMF constant ±10%	480.0	V AC (rms) / 1000rpm
Torque constant ±10% @ rated load	6.73	Nm / A (rms)
Output inertia	9121.8	kgcm²

Torque / speed curve

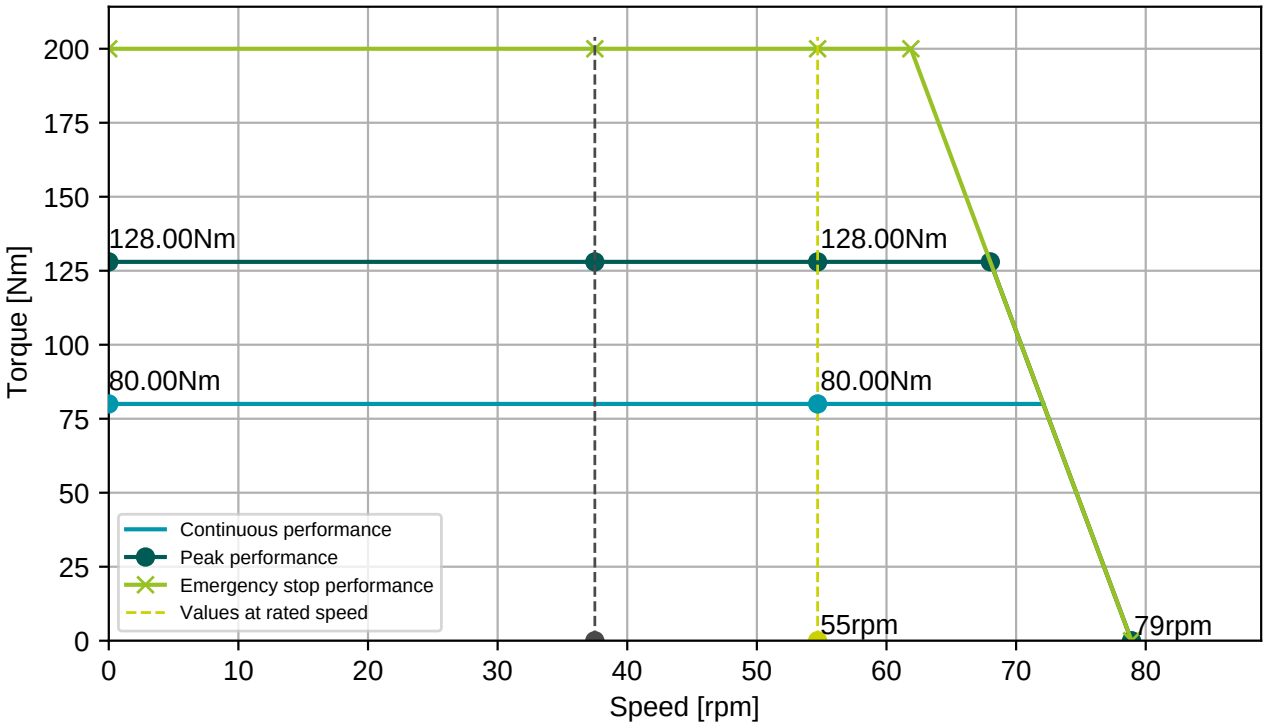

CA3102E20-22P-B-F80-A232

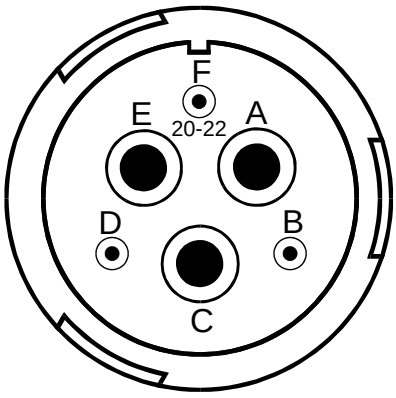

D38999/20ZB35PN

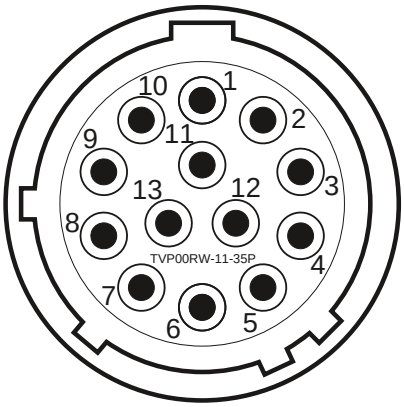

Connector 1 (468)	
A	U
C	V
E	W
F	PE
B	Brake+
D	Brake-

Connector 2 (551)	
1	Vcc
2	GND
3	DATA+
4	DATA-
5	CLOCK+
6	CLOCK-
7	Therm+
8	Therm-
11	BRK_SNS_Up (5-30 VDC)
12	BRK_SNS_GND
13	BRK_SNS_HALL

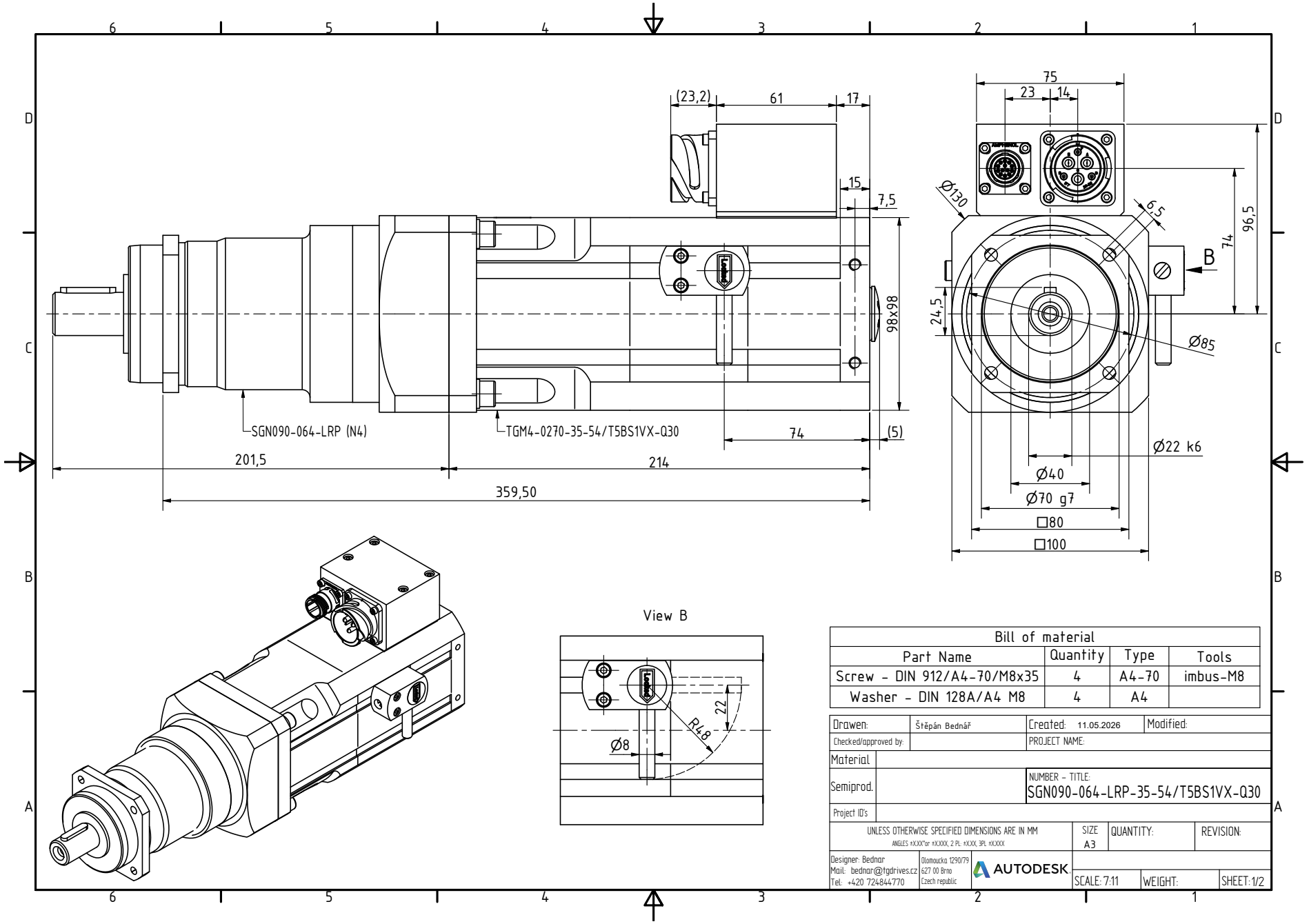

Bill of material			
Part Name	Quantity	Type	Tools
Screw - DIN 912/A4-70/M8x35	4	A4-70	imbus-M8
Washer - DIN 128A/A4 M8	4	A4	

Drawen:	Štěpán Bednář	Created: 11.05.2026	Modified:
Checked/approved by:		PROJECT NAME:	
Material			
Semiprod.		NUMBER - TITLE: SGN090-064-LRP-35-54/T5BS1VX-Q30	
Project ID's			

UNLESS OTHERWISE SPECIFIED DIMENSIONS ARE IN MM ANGLES ±XXX°or ±XXXX, 2 PL ±XXX, 3PL ±XXXX	SIZE A3	QUANTITY:	REVISION:
Designer: Bednar Mail: bednar@tgdrives.cz Tel: +420 724844770	Olomoucka 1290/79 627 00 Brno Czech republic	AUTODESK	SCALE: 7:11 / WEIGHT: / SHEET: 1/2

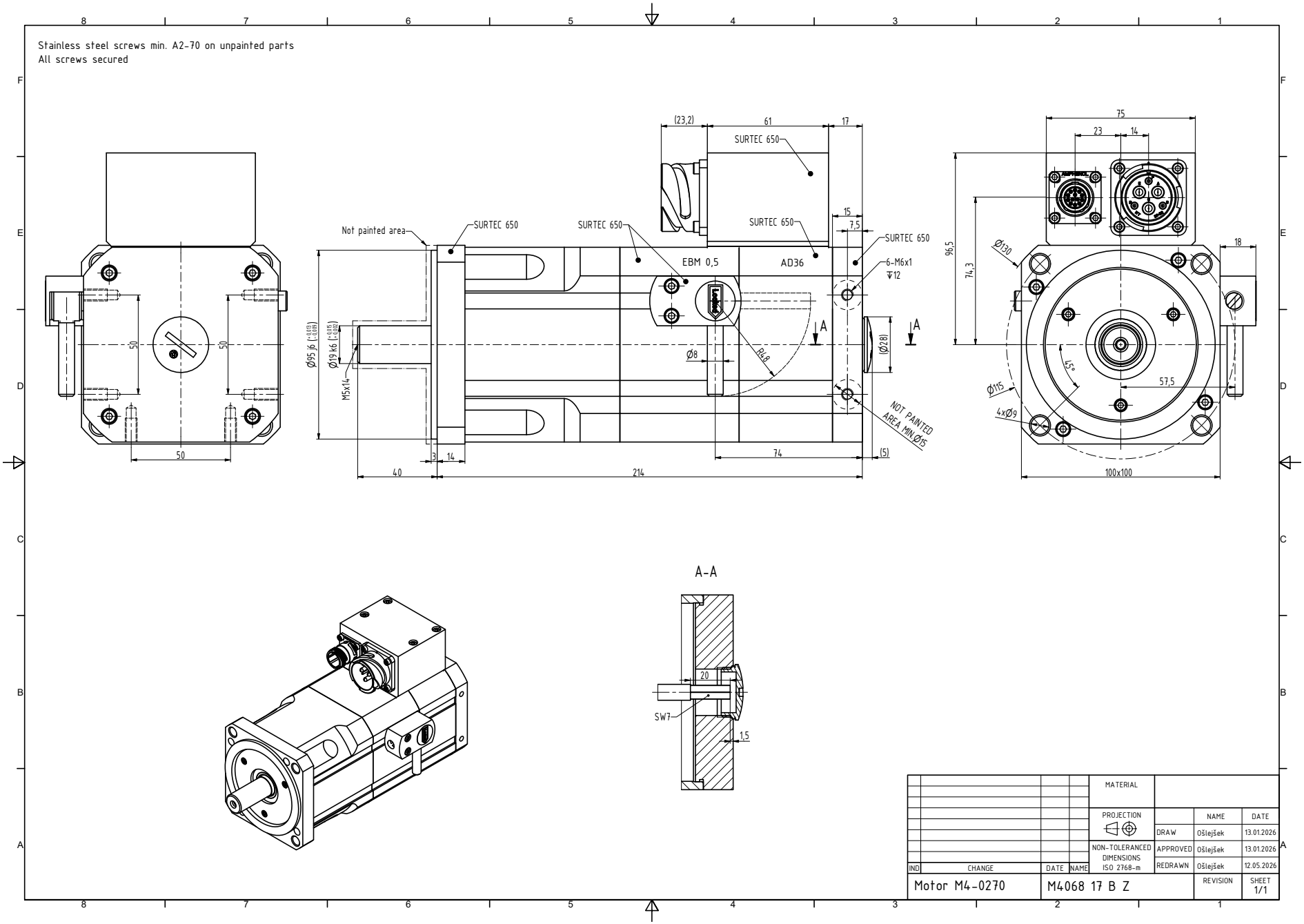
Stainless steel screws min. A2-70 on unpainted parts
All screws secured
Not painted area
SURTEC 650
EBM 0,5
AD36
6-M6x1
NOT PAINTED AREA MIN.Ø15
M5x14
Ø95 j6
Ø19 k6
Ø8
R48
(Ø28)
(23,2)
61
17
15
7,5
75
23
14
18
96,5
74,3
Ø130
Ø115
4xØ9
57,5
45°
100x100
50
40
3
14
214
74
(5)
A-A
20
SW7
1,5
MATERIAL
PROJECTION
NON-TOLERANCED DIMENSIONS ISO 2768-m
NAME
DATE
DRAW
Ošlejšek
13.01.2026
APPROVED
Ošlejšek
13.01.2026
REDRAWN
Ošlejšek
12.05.2026
IND
CHANGE
DATE
NAME
Motor M4-0270
M4068 17 B Z
REVISION
SHEET
1/1

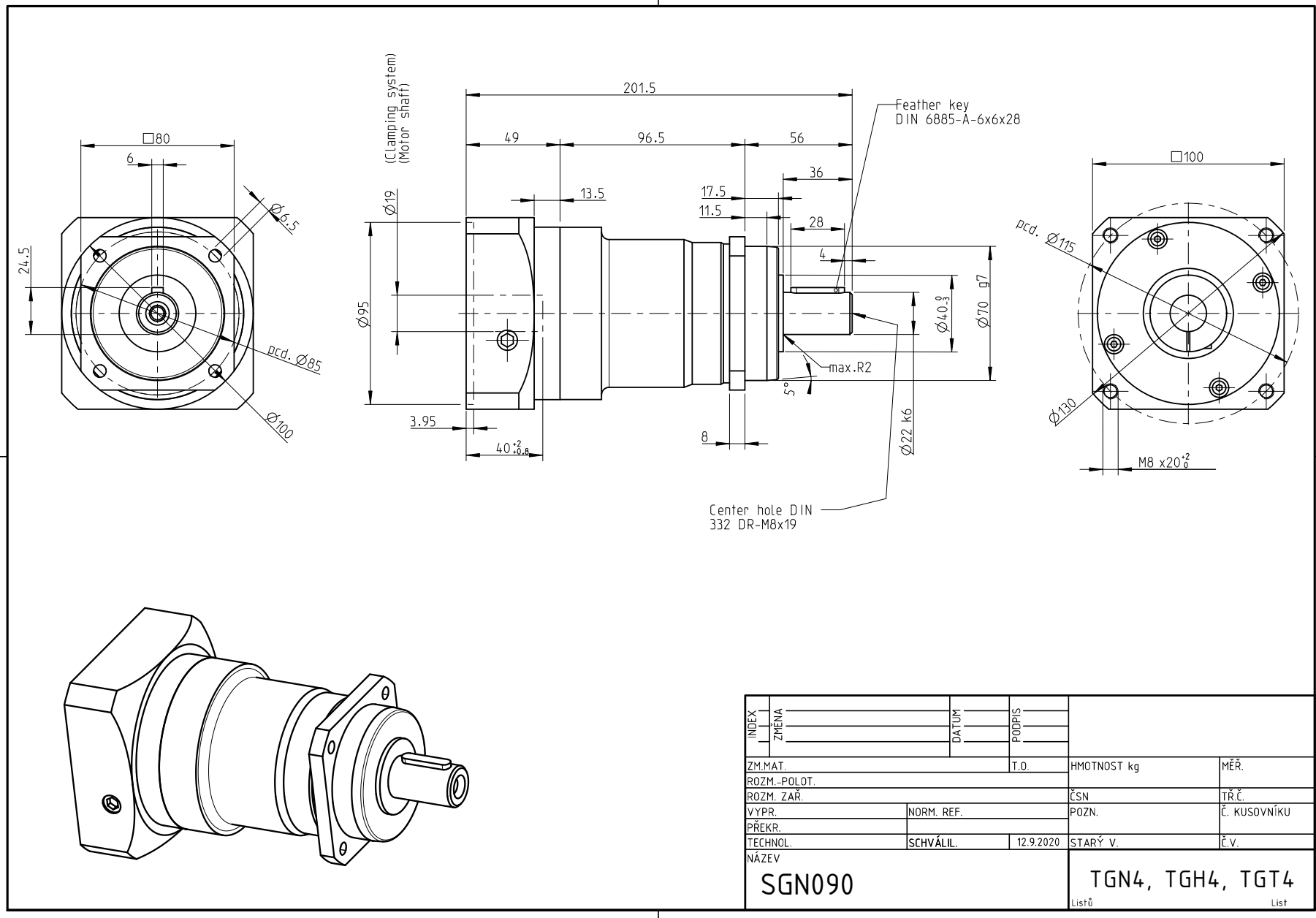

INDEX	ZMĚNA	DATUM	PODPIS		
ZM.MAT.			T.O.	HMOTNOST kg	MĚŘ.
ROZM.-POLOT.					
ROZM. ZAŘ.				ČSN	TŘ.Č.
VYPR.	NORM. REF.			POZN.	Č. KUSOVNÍKU
PŘEKR.					
TECHNOL.	SCHVÁLIL.		12.9.2020	STARÝ V.	Č.V.
NÁZEV	SGN090			TGN4, TGH4, TGT4	
				Listů	List