| Engineering data (WIN 904) | | |
|---|---|---|
| DC bus voltage | 560 | V DC |
| Nominal AC voltage | 380 | V AC (rms) |
| Rated voltage | 251 | V AC (rms) |
| Rated power | 7.0 | kW |
| Rated speed | 4000 | rpm |
| Rated torque | 16.80 | Nm |
| Rated current | 19.57 | A (rms) |
| Peak torque | 90 | Nm |
| Peak current | 88 | A (rms) |
| Stall torque | 30 | Nm |
| Stall current | 24.5 | A (rms) |
| No load speed | 5130 | rpm |
| EMF constant ±10% | 74 | V AC (rms) / 1000rpm |
| Theoretical torque constant ±10% | 1.22 | Nm / A (rms) |
| Torque constant ±10% @ rated load | 0.86 | Nm / A (rms) |
| Number of poles | 10 | |
| Electrical time constant | 13.89 | ms |
| Winding terminal resistance | 0.18 | Ω |
| Rotary field terminal inductance | 2.5 | mH |

| Customs info | |
|---|---|
| HS Code | 85015220 |

| Mechanical data (setting 5) | | |
|---|---|---|
| Max mechanical speed | 6000 | rpm |
| Mech. time constant | 0.68 | ms |
| Thermal time constant | 52 | min |
| Rotor inertia | 32.7 | kgcm² |
| Protection | IP64 | |
| Color | RAL 9005 | |
| Cooling | Convection | |
| Motor-only mass | 20.2 | kg |
| Max. axial force 20kh | 141 | N |
| Max. radial force 20kh* | 741 | N |
| Max. axial force 100kh | 82 | N |
| Max. radial force 100kh* | 434 | N |

** Defined for point of action at ½ output shaft length*

| Sensors | |
|---|---|
| Temperature | PTC 111-K13 {PTC 111-K13 Reissmann} |
| Feedback | 2-pole resolver ( ER5Kd411, TS2620N21E11, RE-15-1-A15) |

Torque / speed curve

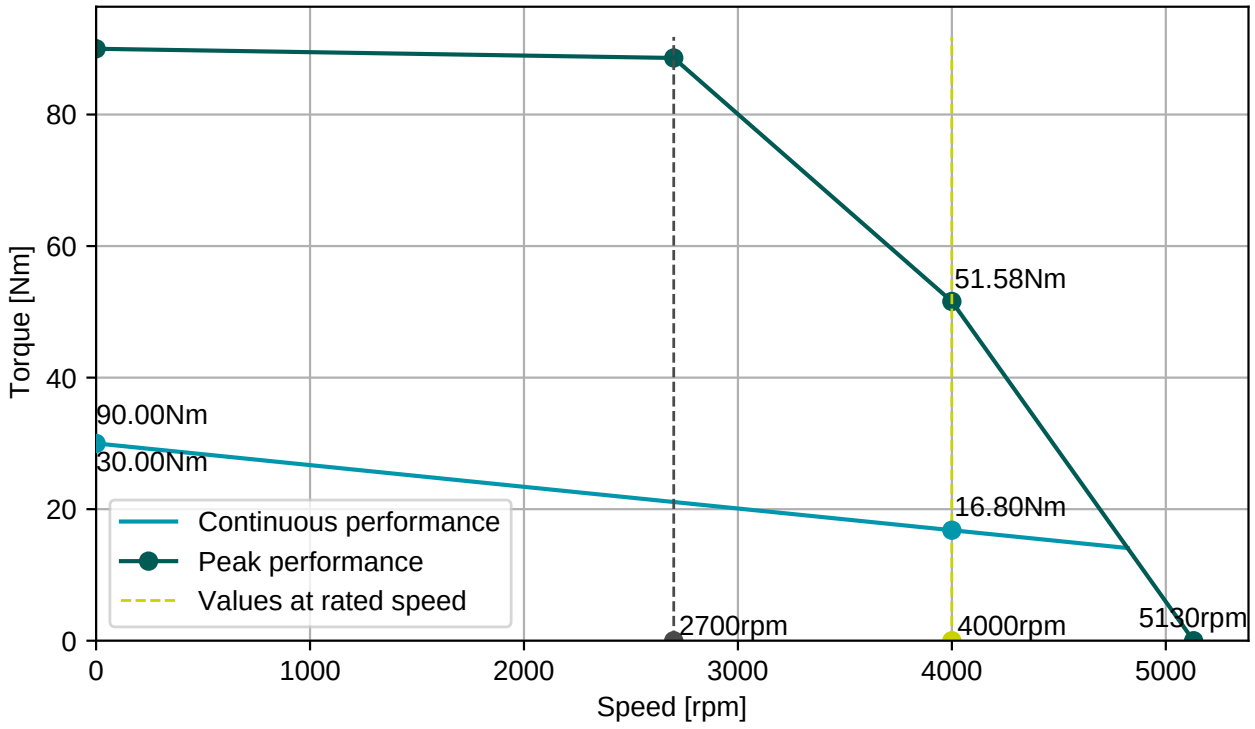


**BGC110N00001216000**
M23, 8 poles, rotary

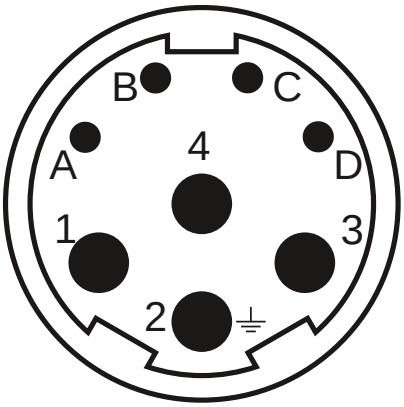


**AGC052N00001215000**
M23, 12 poles, rotary

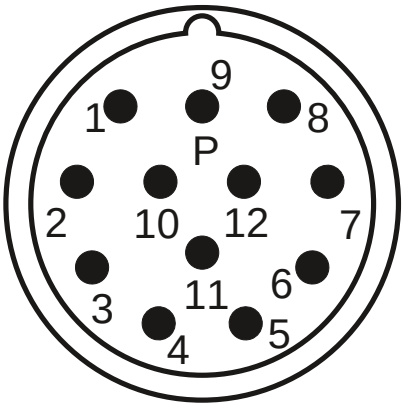


| Connector 1 (9) | |
|---|---|
| **1** | U |
| **4** | V |
| **3** | W |
| **2** | PE |
| **A** | Brake+ |
| **B** | Brake- |
| **C** | |
| **D** | |

| Connector 2 (10) | |
|---|---|
| **2** | Therm+ |
| **3** | S4 |
| **4** | S3 |
| **5** | R2 |
| **6** | Therm- |
| **7** | S2 |
| **8** | S1 |
| **9** | R1 |

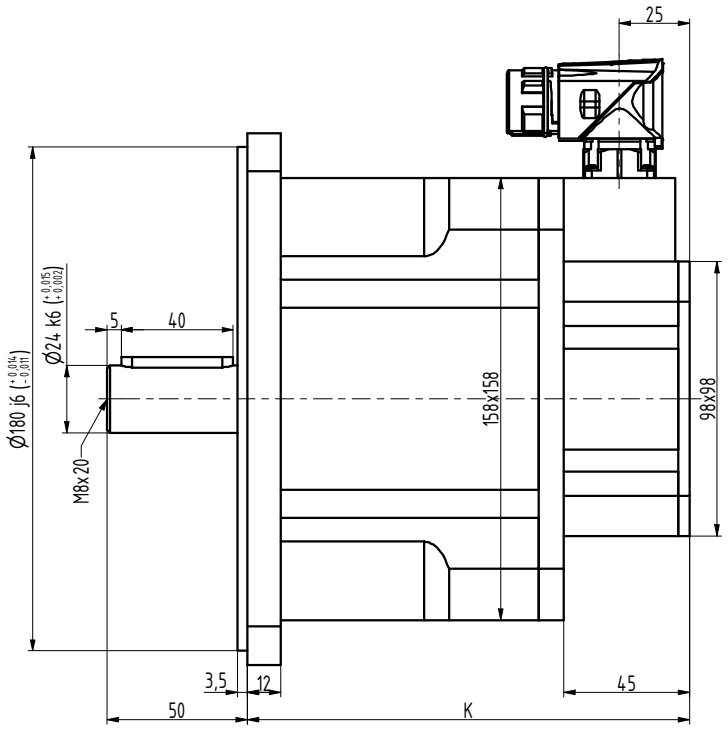


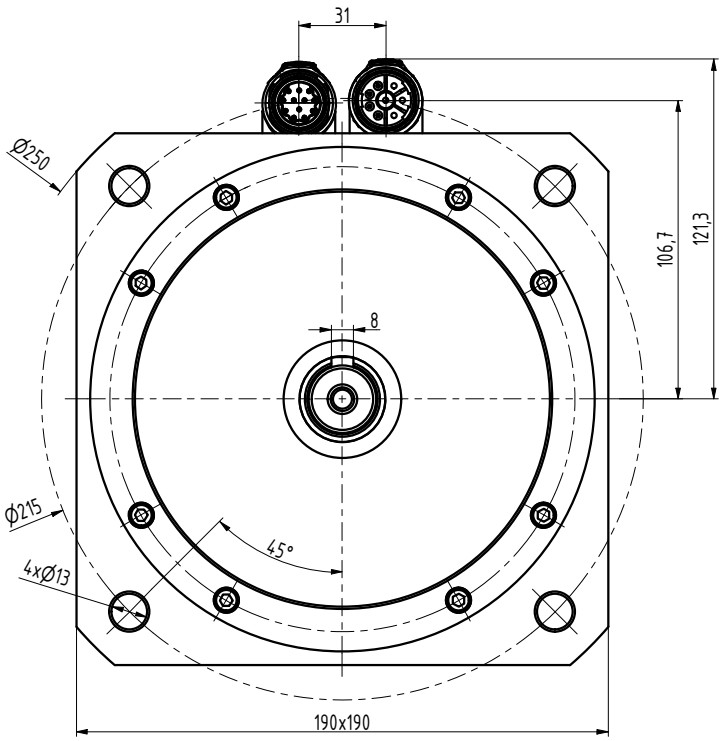


| TYP | K |
|---|---|
| N6-1800 | 158 |
| N6-2400 | 183 |
| N6-3000 | 208 |
| N6-3800 | 233 |
| N6-4400 | 258 |

| | | | | | |
|---|---|---|---|---|---|
| INDEX | ZMĚNA | | DATUM | PODPIS | |
| ZN.MAT. | | | T.O. | HMOTNOST kg | MĚŘ. |
| ROZM.-POLOT. | | | | | |
| POM. ZAŘ. | | | | ČSN | TŘ.Č. |
| VYPR. Ošlejšek | | NORM.REF. | | POZN. | Č. KUSOVNÍKU |
| PŘEKR. | | | | | |
| TECHNOL. | | SCHVÁLIL Ošlejšek | 16.09.2021 | STARÝ V. | Č.V. |
| NÁZEV | | | | | |
| Motor N6 | | | | N6025 01 P Z_S4_S1 | |
| | | | | Listů | List |