Engineering motordata (WIN 1239)		
DC bus voltage	320	V DC
Nominal AC voltage	220	V AC (rms)
Rated voltage	187	V AC (rms)
Rated power	1.5	kW
Rated speed	4500	rpm
Rated torque	3.10	Nm
Rated current	5.15	A (rms)
Peak torque	14.4	Nm
Peak current	24.8	A (rms)
Stall torque	4.8	Nm
Stall current	6.9	A (rms)
No load speed	5230	rpm
EMF constant ±10%	42	V AC (rms) / 1000rpm
Theoretical torque constant ±10%	0.695	Nm / A (rms)
Torque constant ±10% @ rated load	0.602	Nm / A (rms)
Number of poles	10	
Electrical time constant	3.05	ms
Winding terminal resistance	1.234	Ω
Rotary field terminal inductance	3.76	mH

Customs info	
HS Code	85015220

Mechanical motor data (setting 48)		
Max mechanical speed	12000	rpm
Mech. time constant	0.67	ms
Thermal time constant	30	min
Rotor inertia	1.52	kgcm²
Protection	IP64	
Color	RAL 9005	
Cooling	Convection	
Motor-only mass	3.8	kg

Sensors	
Temperature	PT1000 {PT1000}

Gearbox engineering data		
Gear ratio	12	
Efficiency	96	%*
Torsional stiffness	2.5	Nm/arcmin
Number of stages	2	
Rated output torque	32	Nm
Cycling output torque	44	Nm
Max output torque	65	Nm
Emergency output torque	88	Nm
Rated input speed	4500	rpm
Max input speed	11700	rpm
Operating temperature	<-25; 90>	°C
Max. backlash	< 12	arcmin
Service life	20000	h

** at rated speed & torque*

Gearbox mechanical data		
Radial force for 20'000h	400	N*
Radial force for 30'000h	340	N*
Max. radial force	700	N*
Axial force for 20'000h	500	N
Axial force for 30'000h	450	N
Max. axial force	800	N
Tilting moment for 20'000h	14	Nm
Tilting moment for 30'000h	12	Nm
Max. bending moment	12	Nm
Output shaft design	Shaft key	
Mass	1.07	kg
Input inertia	0.138	kgcm²
Protection	IP54	

** Defined for point of action at ½ output shaft length*

Lubrication	
Type	Standard
Lubricant	Grease (lifetime lubrication)

Actuator data		
Rated speed	375	rpm
Rated torque	32.00	Nm
Cycling torque	44.00	Nm
Peak torque	65.00	Nm
Emergency stop torque	88.00	Nm
EMF constant ±10%	504.0	V AC (rms) / 1000rpm
Torque constant ±10% @ rated load	6.93	Nm / A (rms)
Total mass	4.87	kg
Output inertia	238.8	kgcm²

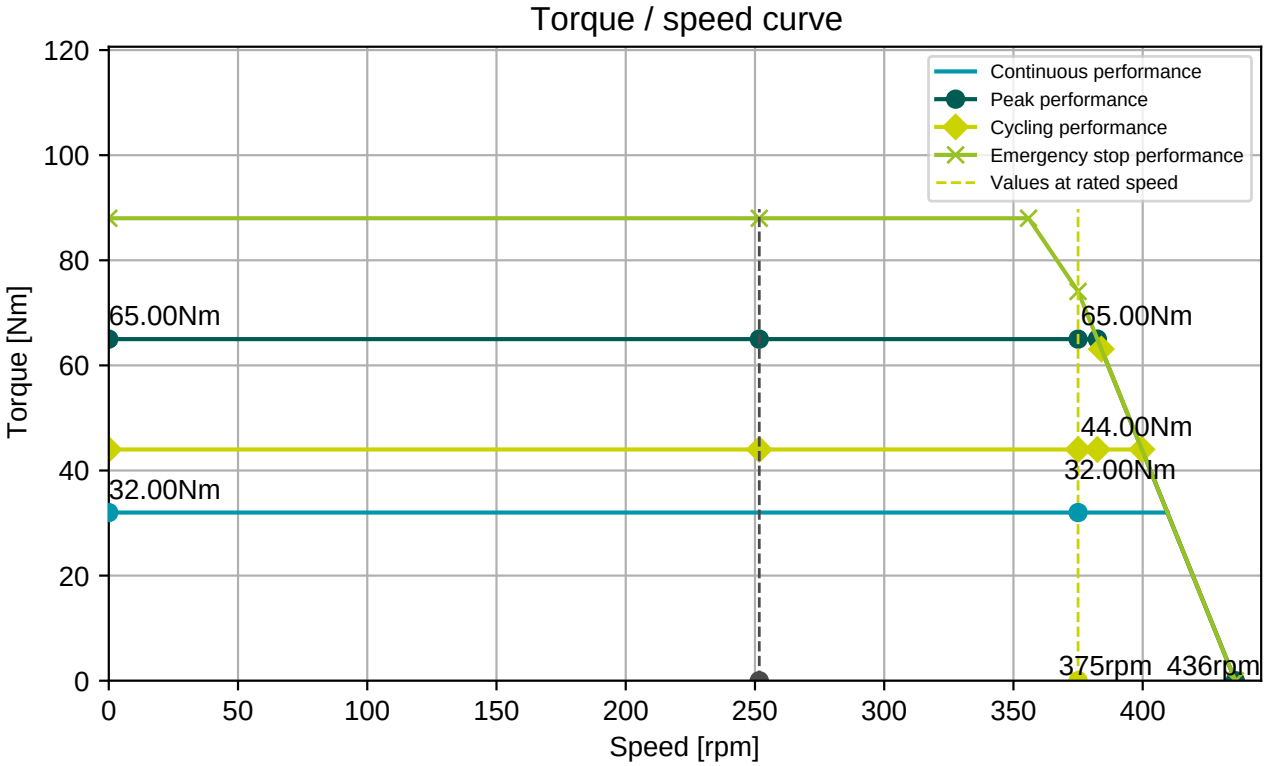

BGC110N00001216000

M23, 8 poles, rotary

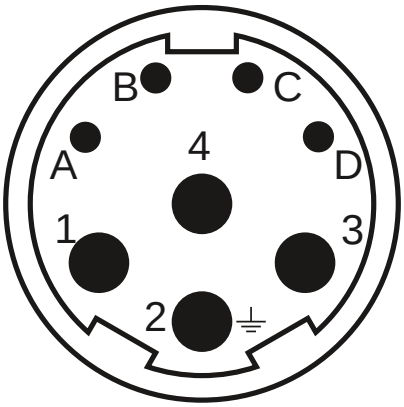

Connector 1 (283)	
1	U
4	V
3	W
2	PE
A	Brake+
B	Brake-
C	GND/DSL-
D	+Us/DSL+

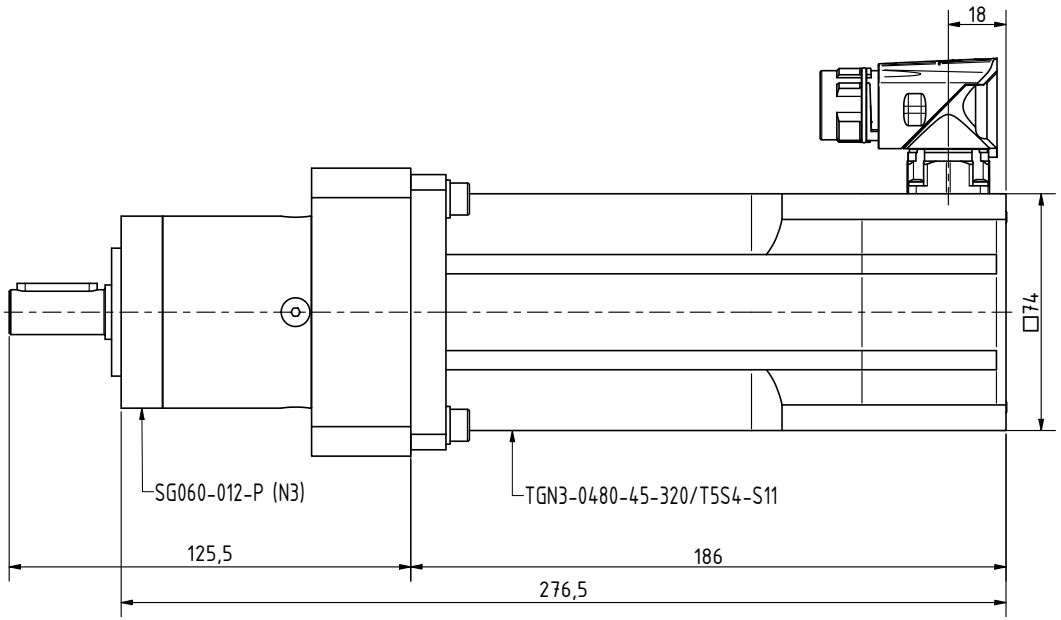

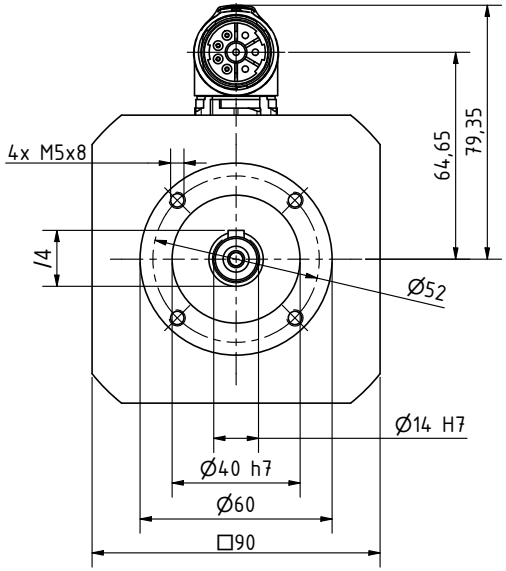

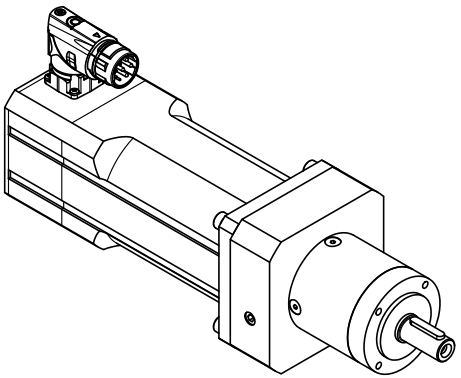

Bill of materials			
Part Name	Quantity	Type	Tools
Screw - DIN 912/A4-70/M6x25	4	A4-70	imbus-M6
Washer - DIN 128A/A4 M6	4	A4	

Untolerated dimensions: ISO 2768 - m

Drawen:	Štěpán Bednář	Created: 13.11.2025	Modified:
Checked/approved by:		PROJECT NAME: **Gearbox SG060-012-P (N3)**	
Material			
Semiprod.		NUMBER - TITLE: SG060-012-P (N3)	
Project ID's			

UNLESS OTHERWISE SPECIFIED DIMENSIONS ARE IN MM
ANGLES: ±X.XX° or ±X.XXX, 2 PL: ±X.XX, 3PL: ±X.XXX

SIZE: A3 | QUANTITY: | REVISION:

Designer: Bednar
Mail: bednar@tgdrives.cz
Tel: +420 724844770
Olomoucka 1290/79
627 00 Brno
Czech republic

AUTODESK

SCALE: 5 : 7 | WEIGHT: | SHEET: 1/1

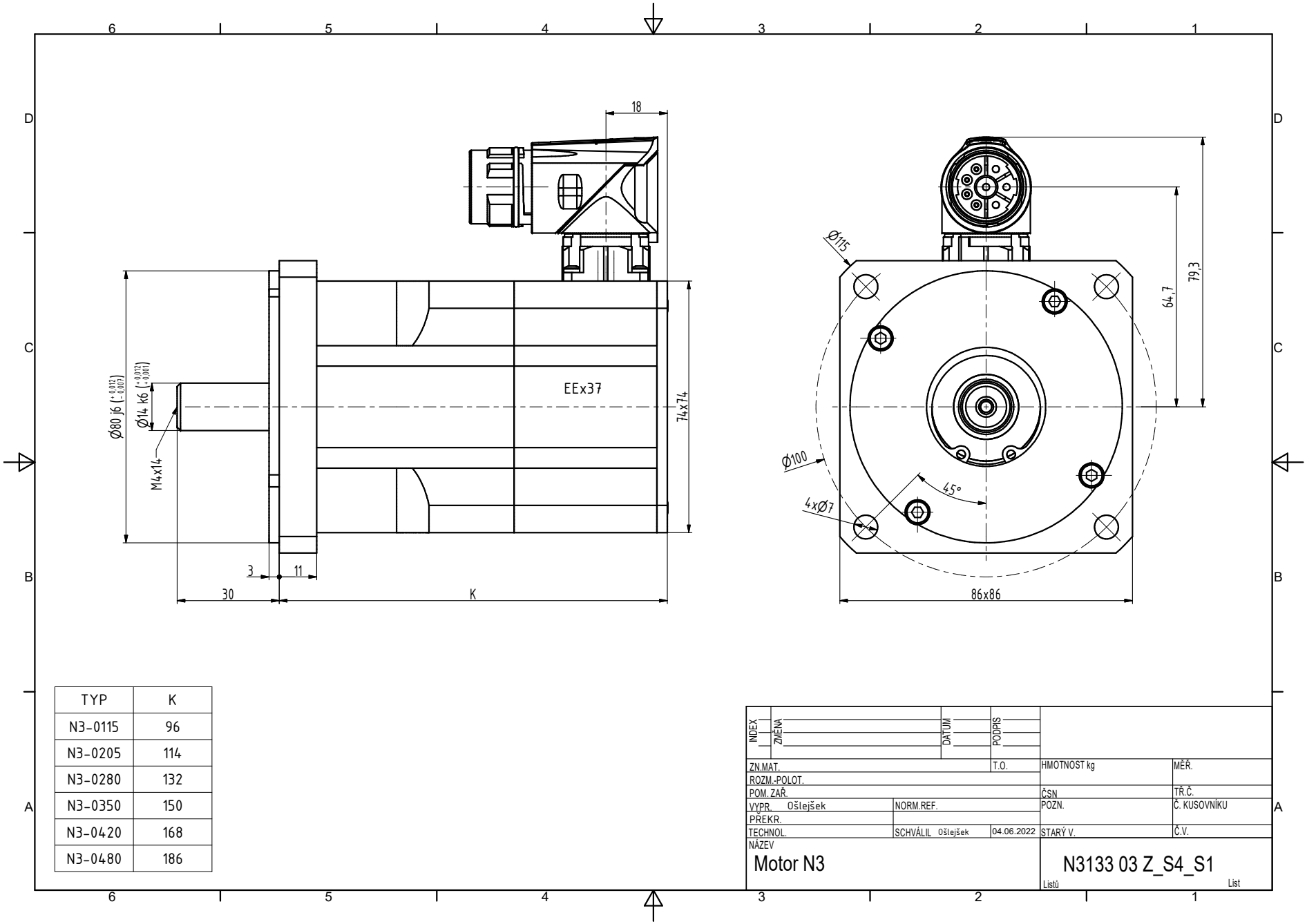

TYP	K
N3-0115	96
N3-0205	114
N3-0280	132
N3-0350	150
N3-0420	168
N3-0480	186

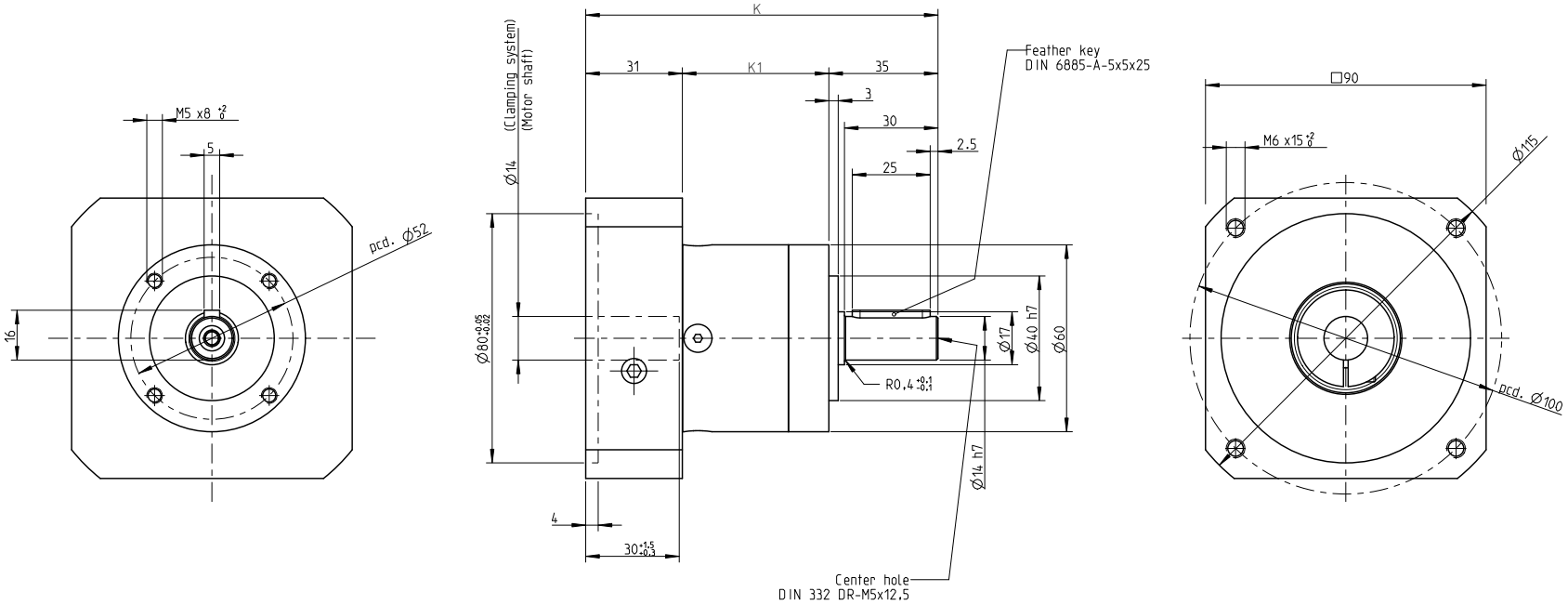

NO OF STAGES	K	K1
I. stage	113	47
II. stage	125,5	59,5
III. stage	138	72

INDEX	ZMĚNA	DATUM	PODPIS

ZM.MAT.		T.O.	HMOTNOST kg	MĚŘ.
ROZM.-POLOT.				
ROZM. ZAŘ.			ČSN	TŘ.Č.
VYPR.	NORM. REF.		POZN.	Č. KUSOVNÍKU
PŘEKR.				
TECHNOL.	**SCHVÁLIL.**	12.9.2020	STARÝ V.	Č.V.

NÁZEV

Gearbox SG060

TGN3, TGH3, TGT3

Listů List