Engineering data (WIN 127)		
DC bus voltage	560	V DC
Nominal AC voltage	330	V AC (rms)
Rated voltage	290	V AC (rms)
Rated power	785	W
Rated speed	3000	rpm
Rated torque	2.50	Nm
Rated current	1.82	A (rms)
Peak torque	12	Nm
Peak current	9	A (rms)
Stall torque	3	Nm
Stall current	2.08	A (rms)
No load speed	3790	rpm
EMF constant ±10%	87	V AC (rms) / 1000rpm
Theoretical torque constant ±10%	1.44	Nm / A (rms)
Torque constant ±10% @ rated load	1.37	Nm / A (rms)
Number of poles	6	
Electrical time constant	2.30	ms
Winding terminal resistance	11.6	Ω
Rotary field terminal inductance	26.7	mH

Customs info	
HS Code	85015220

Mechanical data (setting 5)		
Max mechanical speed	12000	rpm
Mech. time constant	1.46	ms
Thermal time constant	33	min
Rotor inertia	1.5	kgcm²
Protection	IP64	
Color	RAL 9005	
Cooling	Convection	
Motor-only mass	4.2	kg
Max. axial force 20kh	62	N
Max. radial force 20kh*	327	N
Max. axial force 100kh	36	N
Max. radial force 100kh*	191	N

** Defined for point of action at ½ output shaft length*

Sensors	
Temperature	UP72T150-140C {UP72T150-140C Uchiya}
Feedback	2-pole resolver (ER5Kd411, TS2620N21E11, RE-15-1-A15)

Torque / speed curve

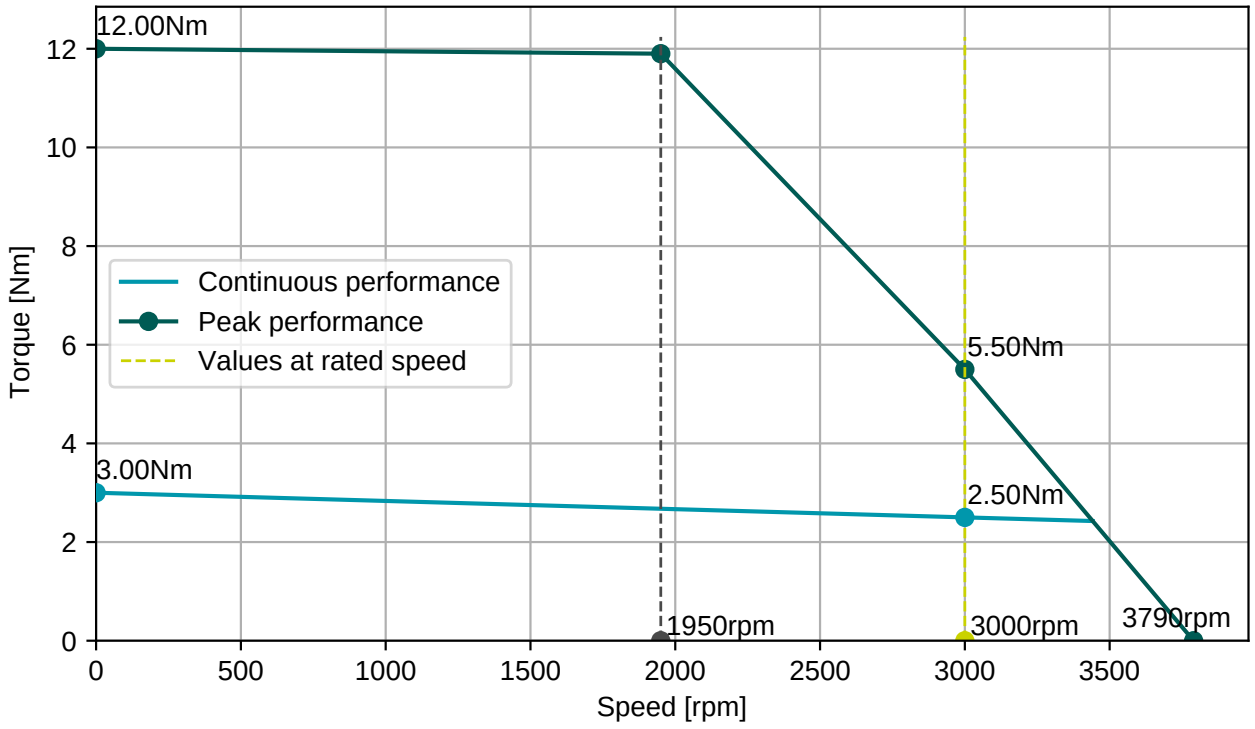

BEA120N00000200000
M23, 8 poles, straight

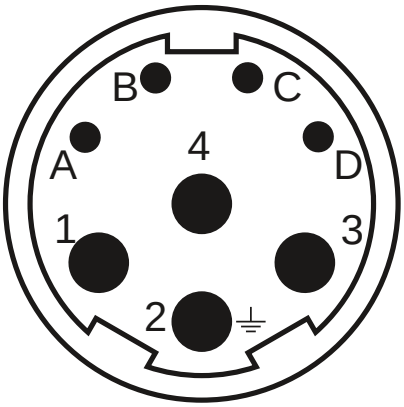

AEA052N00000201000
M23, 12 poles, straight

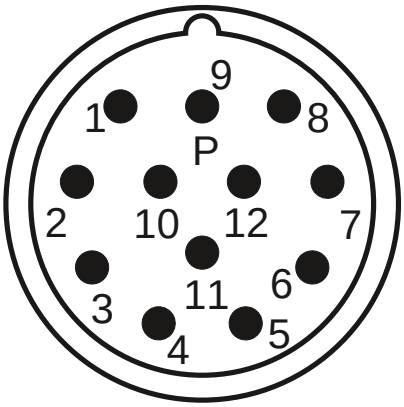

Connector 1 (9)	
1	U
4	V
3	W
2	PE
A	Brake+
B	Brake-
C	
D	

Connector 2 (10)	
2	Therm+
3	S4
4	S3
5	R2
6	Therm-
7	S2
8	S1
9	R1

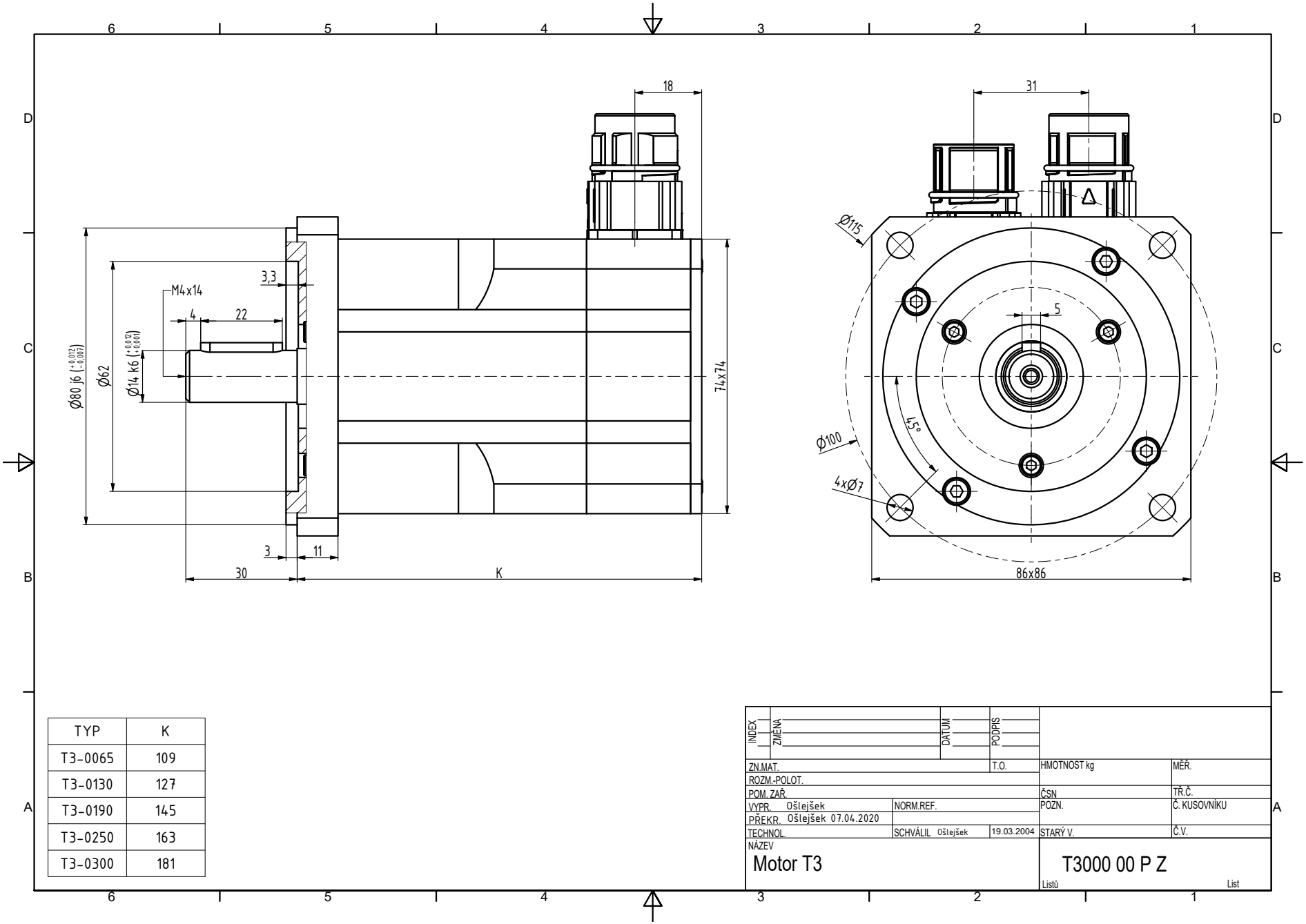

TYP	K
T3-0065	109
T3-0130	127
T3-0190	145
T3-0250	163
T3-0300	181

INDEX	ZMĚNA	DATUM	PODPIS		
ZN.MAT.			T.O.	HMOTNOST kg	MĚŘ.
ROZM.-POLOT.					
POM. ZAŘ.				ČSN	TŘ.Č.
VYPR. Ošlejšek		NORM.REF.		POZN.	Č. KUSOVNÍKU
PŘEKR. Ošlejšek 07.04.2020					
TECHNOL.		SCHVÁLIL Ošlejšek	19.03.2004	STARÝ V.	Č.V.

NÁZEV
Motor T3

T3000 00 P Z

Listů List