Engineering data (WIN 710)		
DC bus voltage	320	V DC
Nominal AC voltage	220	V AC (rms)
Rated voltage	162	V AC (rms)
Rated power	1.9	kW
Rated speed	3000	rpm
Rated torque	6.10	Nm
Rated current	8.77	A (rms)
Peak torque	22.5	Nm
Peak current	40.7	A (rms)
Stall torque	7.5	Nm
Stall current	8.9	A (rms)
No load speed	4300	rpm
EMF constant ±10%	51	V AC (rms) / 1000rpm
Theoretical torque constant ±10%	0.84	Nm / A (rms)
Torque constant ±10% @ rated load	0.70	Nm / A (rms)
Number of poles	10	
Electrical time constant	6.32	ms
Winding terminal resistance	0.76	Ω
Rotary field terminal inductance	4.8	mH

Customs info	
HS Code	85015220

Mechanical data (setting 5)		
Max mechanical speed	9000	rpm
Mech. time constant	0.60	ms
Thermal time constant	30	min
Rotor inertia	3.26	kgcm²
Protection	IP64	
Color	RAL 9005	
Cooling	Convection	
Motor-only mass	5.1	kg
Max. axial force 20kh	124	N
Max. radial force 20kh*	653	N
Max. axial force 100kh	73	N
Max. radial force 100kh*	382	N

** Defined for point of action at ½ output shaft length*

Sensors	
Temperature	PTC 111-K13 {PTC 111-K13 Reissmann}
Feedback	2-pole resolver (ER5Kd411, TS2620N21E11, RE-15-1-A15)

Torque / speed curve

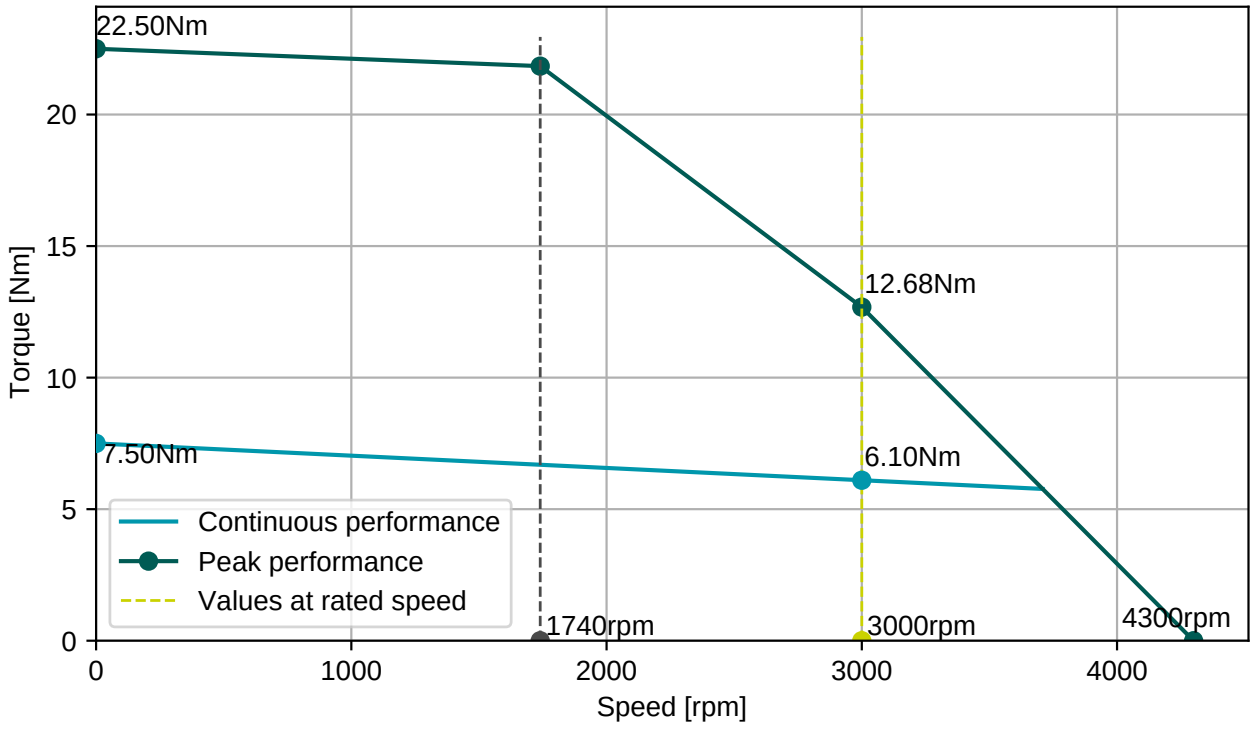

Cable SF4x1,5, D=9,6±0,4mm

Connector 1 (21)	
1	U
2	V
3	W
PE	PE
5	Brake+
6	Brake-

Numbers printed on the cables

Cable R4x2x0,25, D=6,8±0,4mm

Connector 2 (22)	
white	R1
brown	R2
grey	S1
green	S2
pink	S3
yellow	S4
red	Therm+
blue	Therm-

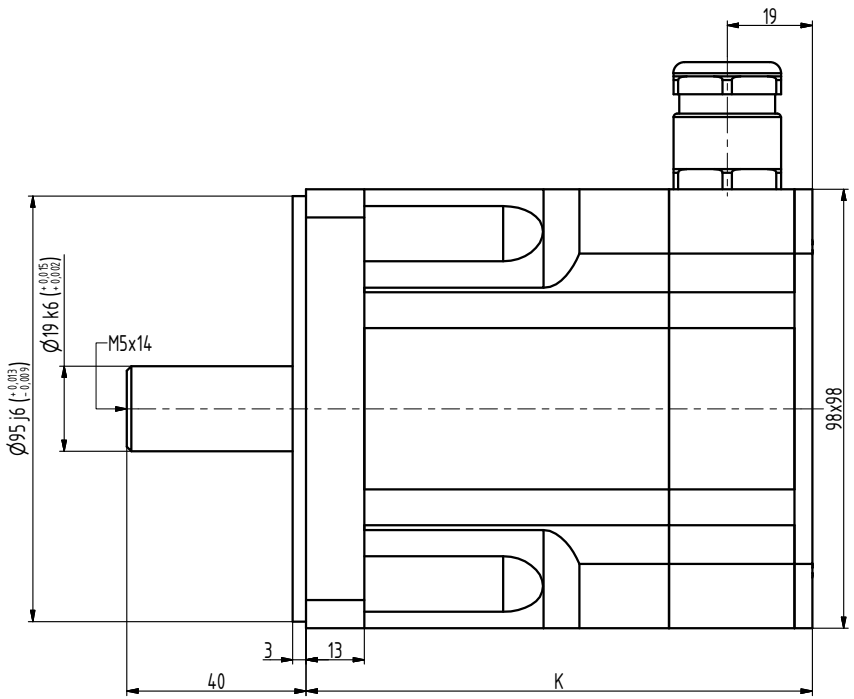

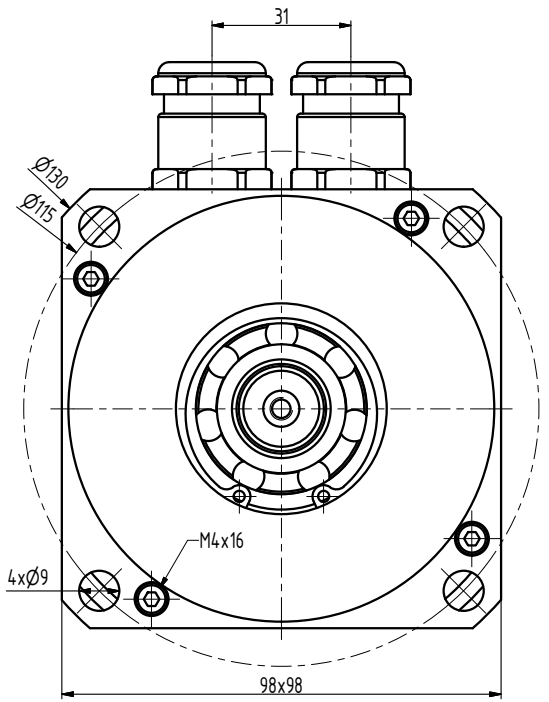

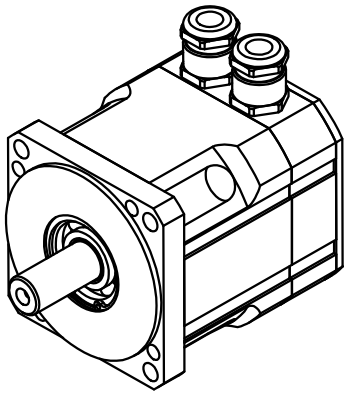

TYP	K
N4-0510	113
N4-0750	143
N4-0960	173
N4-1130	203

INDEX	ZMĚNA	DATUM	PODPIS

ZN.MAT.		T.O.	HMOTNOST kg	MĚŘ.
ROZM.-POLOT.				
POM. ZAŘ.			ČSN	TŘ.Č.
VYPR. Šimík	NORM.REF.		POZN.	Č. KUSOVNÍKU
PŘEKR.				
TECHNOL.	SCHVÁLIL Ošlejšek	18.2.2015	STARÝ V.	Č.V.

NÁZEV
Motor N4

N4083 11 Z

Listů List