Engineering motordata (WIN 1031)		
DC bus voltage	560	V DC
Nominal AC voltage	380	V AC (rms)
Rated voltage	294	V AC (rms)
Rated power	2.3	kW
Rated speed	1000	rpm
Rated torque	22.00	Nm
Rated current	5.6	A (rms)
Peak torque	72	Nm
Peak current	21.6	A (rms)
Stall torque	24	Nm
Stall current	5.5	A (rms)
No load speed	1450	rpm
EMF constant ±10%	262	V AC (rms) / 1000rpm
Theoretical torque constant ±10%	4.33	Nm / A (rms)
Torque constant ±10% @ rated load	3.93	Nm / A (rms)
Number of poles	10	
Electrical time constant	13.25	ms
Winding terminal resistance	3.14	Ω
Rotary field terminal inductance	41.6	mH

Customs info	
HS Code	85015220

Mechanical motor data (setting 48)		
Max mechanical speed	6000	rpm
Mech. time constant	0.74	ms
Thermal time constant	47	min
Rotor inertia	25.6	kgcm²
Protection	IP64	
Color	RAL 9005	
Cooling	Convection	
Motor-only mass	13.8	kg
Max. axial force 20kh	149	N
Max. radial force 20kh*	782	N
Max. axial force 100kh	87	N
Max. radial force 100kh*	458	N

** Defined for point of action at ½ output shaft length*

Sensors	
Temperature	PT1000 {PT1000}
Feedback	EDS35 (HDSL) single-turn, 24 bits

Gearbox engineering data		
Gear ratio	40	
Efficiency*	95	%
Torsional stiffness	251	Nm/arcmin
Number of stages	2	
Rated output torque	375	Nm
Cycling output torque	750	Nm
Max output torque	1200	Nm
Emergency output torque	1500	Nm
Rated input speed	3500	rpm
Max input speed	8500	rpm
Operating temperature	<-25; 90>	°C
Max. backlash	< 5	arcmin
Service life	20000	h

** at rated speed & torque*

Gearbox mechanical data		
Radial force for 20'000h	12000	N
Radial force for 30'000h	11000	N
Max. radial force	12000	N
Axial force for 20'000h	8500	N
Axial force for 30'000h	7500	N
Max. axial force	8500	N
Tilting moment for 20'000h	1219	Nm
Tilting moment for 30'000h	1117	Nm
Max. bending moment	80	Nm
Output shaft design	Flange	
Mass	14.88	kg
Input inertia	1.992	kgcm²
Protection	IP65	

Lubrication	
Type	Standard
Lubricant	Castrol Optigear Synthetic 800/150

Actuator data		
Rated speed	25	rpm
Rated torque	375.00	Nm
Cycling torque	750.00	Nm
Peak torque	1200.00	Nm
Emergency stop torque	1500.00	Nm
EMF constant ±10%	10480.0	V AC (rms) / 1000rpm
Torque constant ±10% @ rated load	149.29	Nm / A (rms)
Total mass	28.68	kg
Output inertia	44147.2	kgcm²

Torque / speed curve

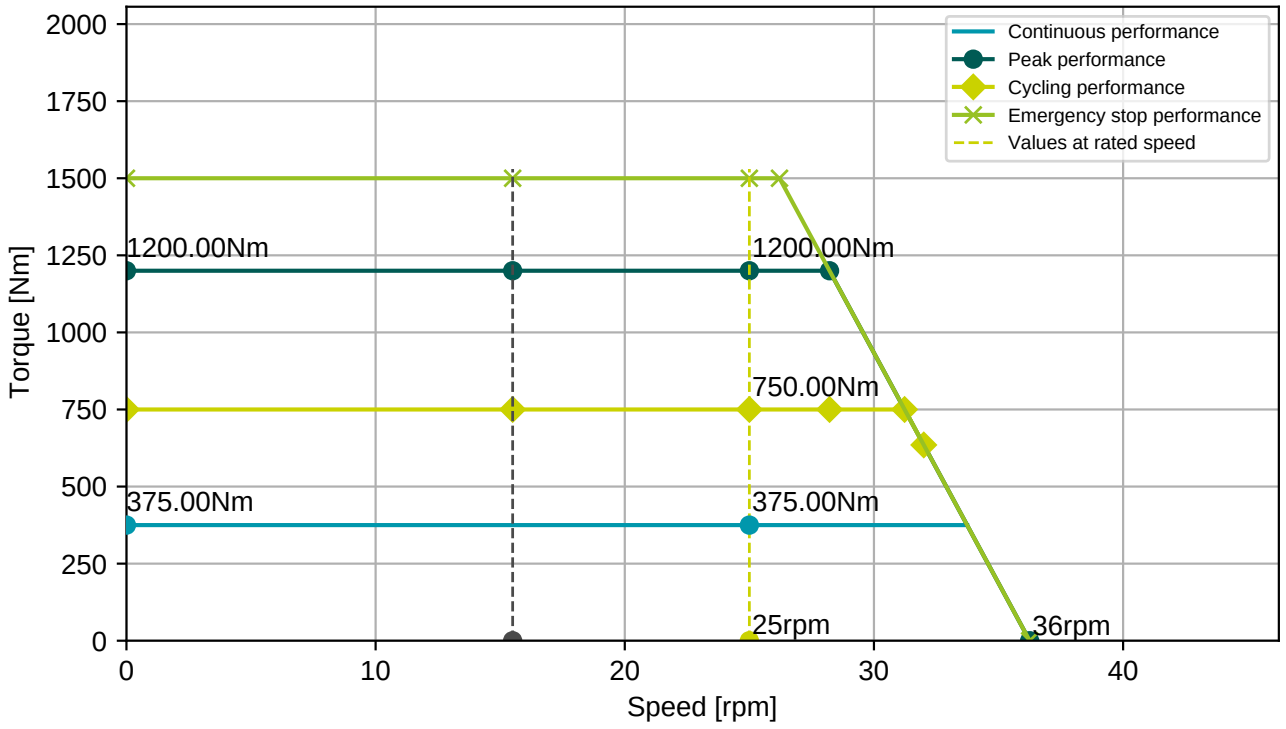

BGC110N00001216000

M23, 8 poles, rotary

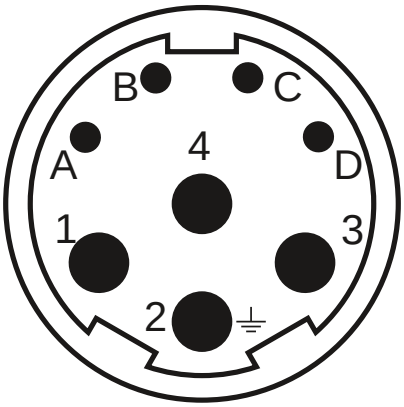

Connector 1 (283)	
1	U
4	V
3	W
2	PE
A	Brake+
B	Brake-
C	GND/DSL-
D	+Us/DSL+

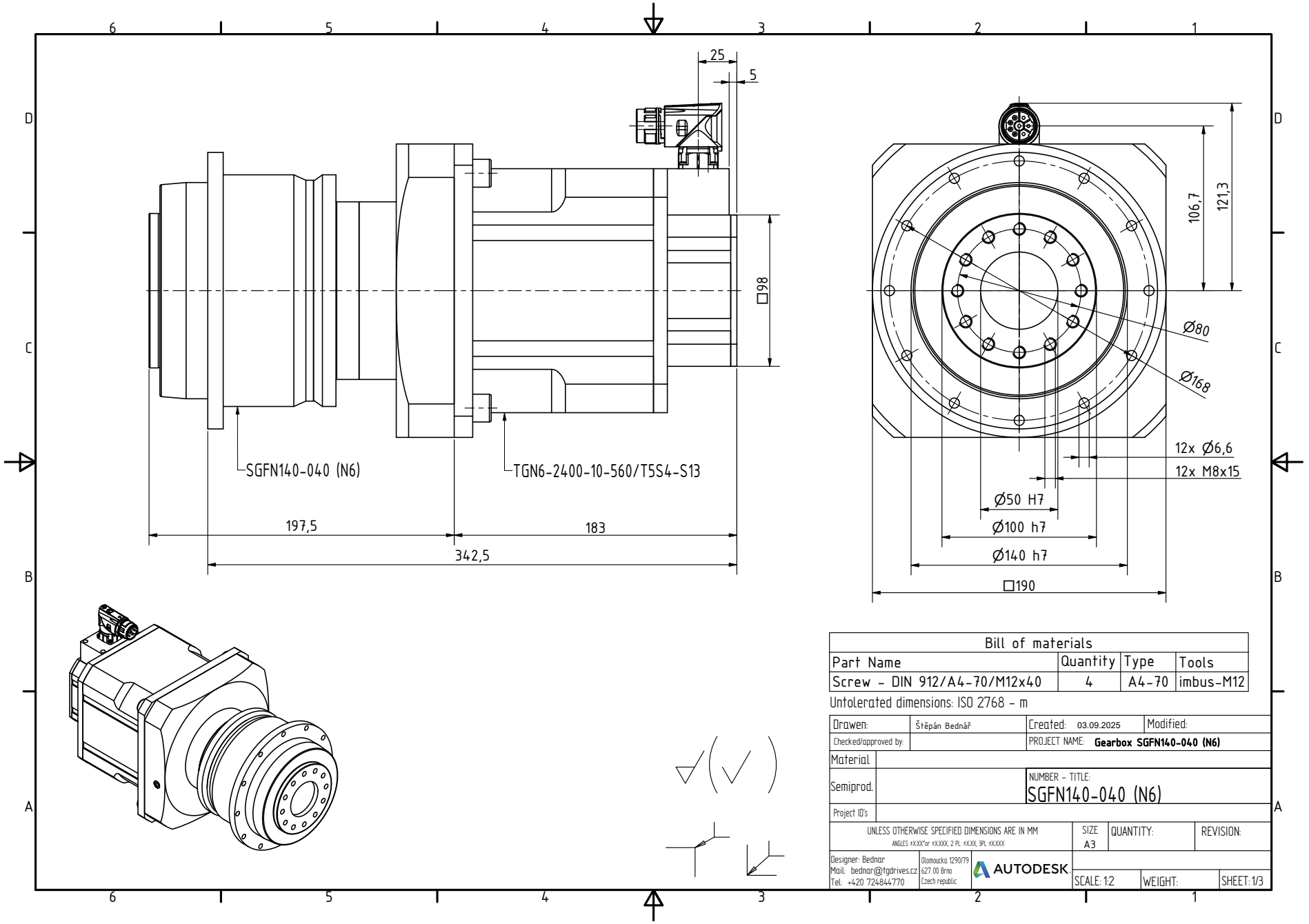

Bill of materials			
Part Name	Quantity	Type	Tools
Screw - DIN 912/A4-70/M12x40	4	A4-70	imbus-M12

Untolerated dimensions: ISO 2768 - m

Drawen:	Štěpán Bednář	Created: 03.09.2025	Modified:
Checked/approved by:		PROJECT NAME: **Gearbox SGFN140-040 (N6)**	
Material			
Semiprod.		NUMBER - TITLE: SGFN140-040 (N6)	
Project ID's			

UNLESS OTHERWISE SPECIFIED DIMENSIONS ARE IN MM ANGLES ±X,XX° or ±X,XXX, 2 PL ±X,XX, 3PL ±X,XXX		SIZE A3	QUANTITY: / REVISION:
Designer: Bednar Mail: bednar@tgdrives.cz Tel: +420 724844770	Olomoucka 1290/79 627 00 Brno Czech republic	AUTODESK	SCALE: 1:2 / WEIGHT: / SHEET: 1/3

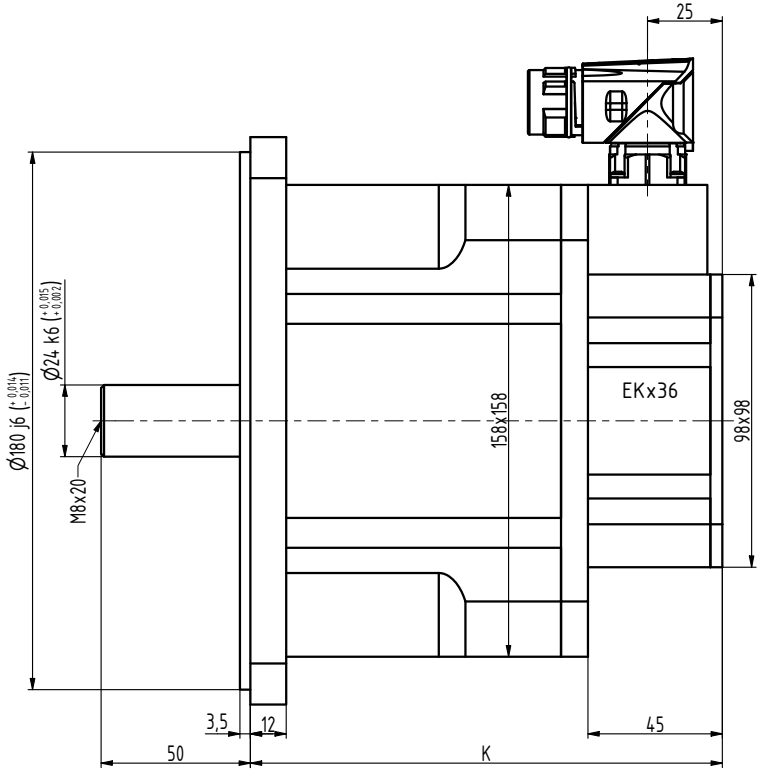

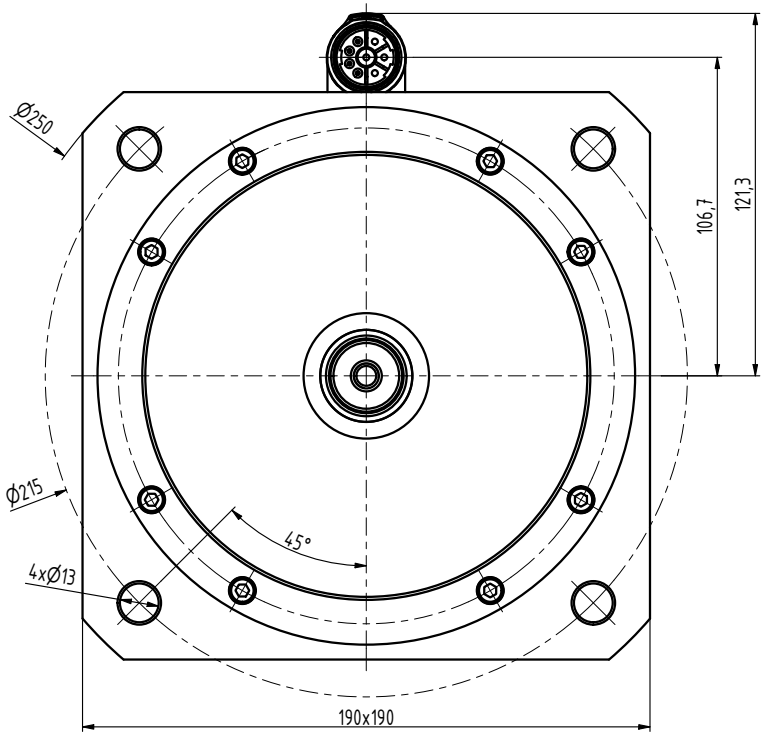

TYP	K
N6-1800	158
N6-2400	183
N6-3000	208
N6-3800	233
N6-4400	258

INDEX	ZMĚNA	DATUM	PODPIS		
ZN.MAT.			T.O.	HMOTNOST kg	MĚŘ.
ROZM.-POLOT.					
POM. ZAŘ.				ČSN	TŘ.Č.
VYPR. Ošlejšek		NORM.REF.		POZN.	Č. KUSOVNÍKU
PŘEKR.					
TECHNOL.		SCHVÁLIL Ošlejšek	19.09.2021	STARÝ V.	Č.V.

NÁZEV
Motor N6

N6028 04 Z_S4_S1

Listů List

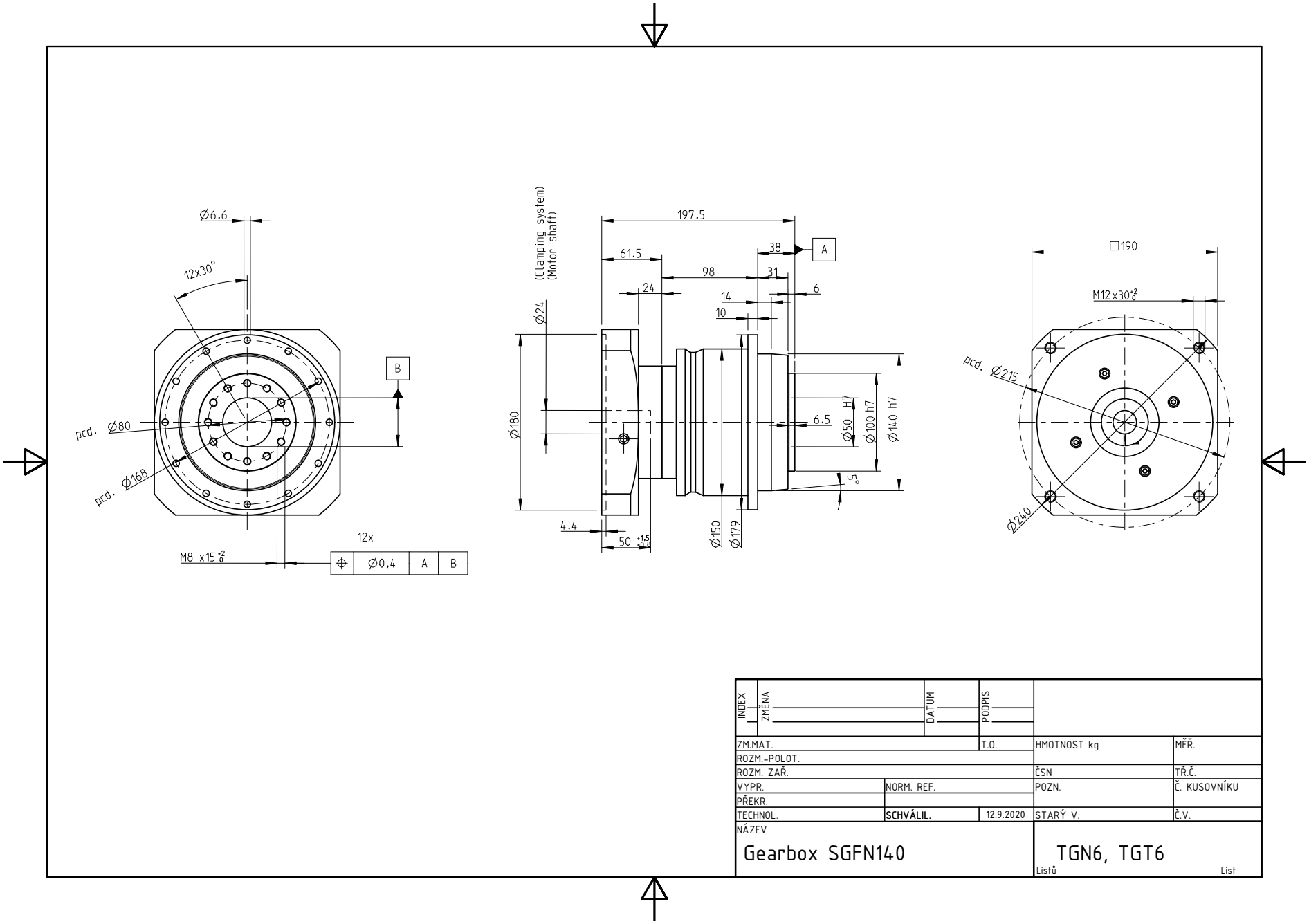

INDEX	ZMĚNA	DATUM	PODPIS	

ZM.MAT.		T.O.	HMOTNOST kg	MĚŘ.
ROZM.-POLOT.				
ROZM. ZAŘ.			ČSN	TŘ.Č.
VYPR.	NORM. REF.		POZN.	Č. KUSOVNÍKU
PŘEKR.				
TECHNOL.	SCHVÁLIL.	12.9.2020	STARÝ V.	Č.V.

NÁZEV

Gearbox SGFN140

TGN6, TGT6

Listů List