Engineering data (WIN 1346)		
DC bus voltage	48	V DC
Nominal AC voltage	33	V AC (rms)
Rated voltage	22	V AC (rms)
Rated power	1.4	kW
Rated speed	3000	rpm
Rated torque	4.50	Nm
Rated current	44.18	A (rms)
Peak torque	19.5	Nm
Peak current	264.7	A (rms)
Stall torque	6.5	Nm
Stall current	60.6	A (rms)
No load speed	5080	rpm
EMF constant ±10%	6.48	V AC (rms) / 1000rpm
Theoretical torque constant ±10%	0.107	Nm / A (rms)
Torque constant ±10% @ rated load	0.102	Nm / A (rms)
Number of poles	10	
Electrical time constant	5.79	ms
Winding terminal resistance	0.019	Ω
Rotary field terminal inductance	0.11	mH

Customs info	
HS Code	85015220

Mechanical data (setting 5)		
Max mechanical speed	9000	rpm
Mech. time constant	1.35	ms
Thermal time constant	30	min
Rotor inertia	4.7	kgcm²
Protection	IP65	
Color	RAL 9005	
Cooling	Convection	
Motor-only mass	7.3	kg

Sensors	
Temperature	PT1000 {PT1000}
Feedback	2-pole resolver (ER5Kd411, TS2620N21E11, RE-15-1-A15)

Torque / speed curve

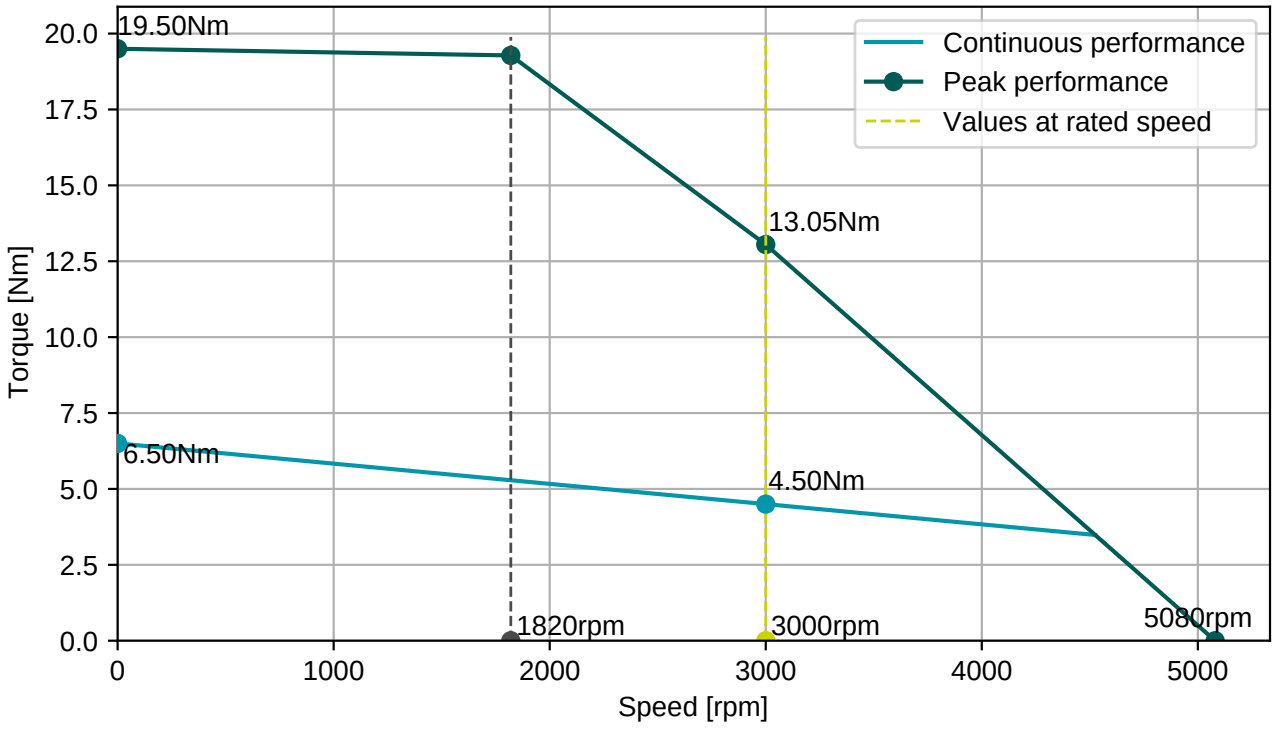

Connector 1 (281)	
white	U
blue	V
red	W

Connector 2 (22)	
white	R1
brown	R2
grey	S1
green	S2
pink	S3
yellow	S4
red	Therm+
blue	Therm-

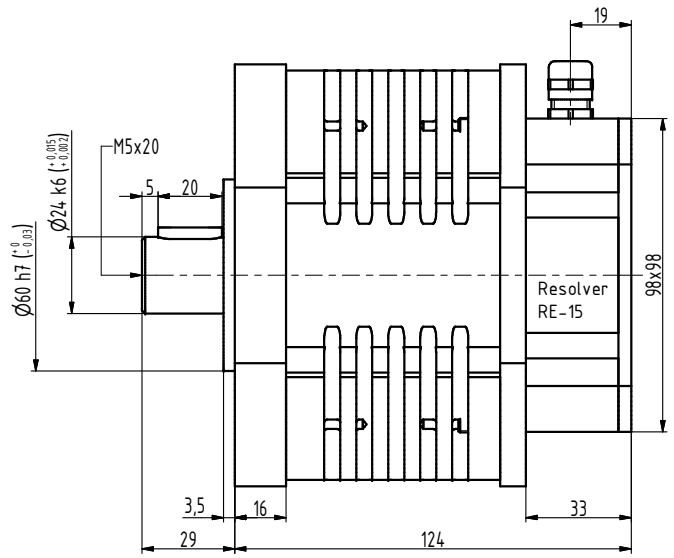

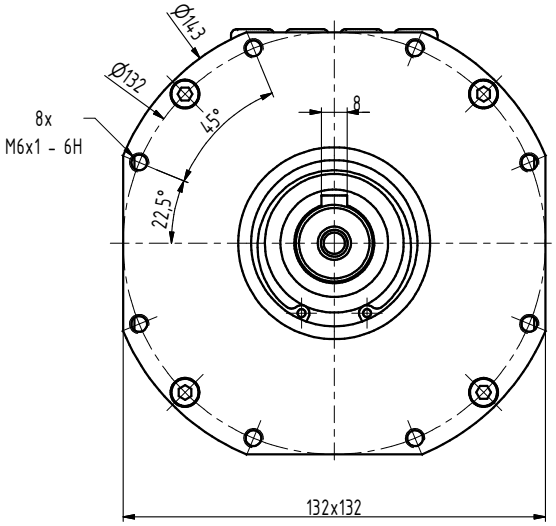

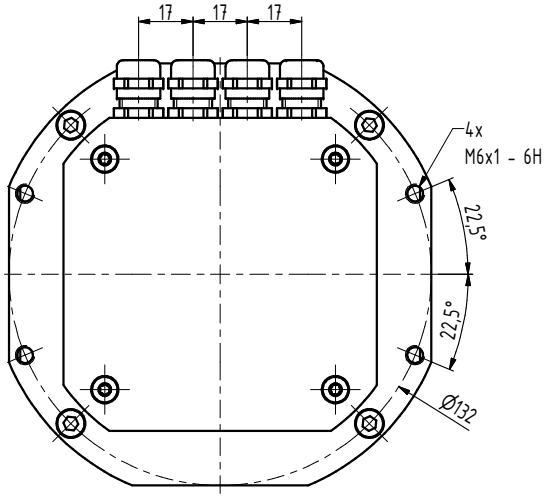

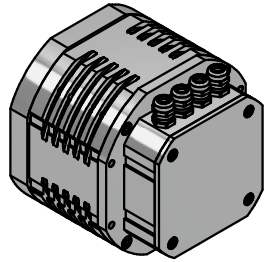

INDEX	ZMĚNA	DATUM	PODPIS

ZN.MAT.	T.O.	HMOTNOST kg	MĚŘ.
ROZM.-POLOT.			
POM. ZAŘ.		ČSN	TŘ.Č.
VYPR. Ošlejšek	NORM.REF.	POZN.	Č. KUSOVNÍKU
PŘEKR.			
TECHNOL.	SCHVÁLIL Ošlejšek 03.09.2020	STARÝ V.	Č.V.

NÁZEV

Motor N5-0650

N5127 04 P Z

Listů List