Engineering motordata (WIN 1068)		
DC bus voltage	560	V DC
Nominal AC voltage	380	V AC (rms)
Rated voltage	308	V AC (rms)
Rated power	7.6	kW
Rated speed	2000	rpm
Rated torque	36.50	Nm
Rated current	17.31	A (rms)
Peak torque	132	Nm
Peak current	63.7	A (rms)
Stall torque	44	Nm
Stall current	17.7	A (rms)
No load speed	2530	rpm
EMF constant ±10%	154	V AC (rms) / 1000rpm
Theoretical torque constant ±10%	2.547	Nm / A (rms)
Torque constant ±10% @ rated load	2.109	Nm / A (rms)
Number of poles	10	
Electrical time constant	14.29	ms
Winding terminal resistance	0.49	Ω
Rotary field terminal inductance	7	mH

Customs info	
HS Code	85015230

Mechanical motor data (setting 48)		
Max mechanical speed	6000	rpm
Mech. time constant	0.61	ms
Thermal time constant	62	min
Rotor inertia	47	kgcm²
Protection	IP64	
Color	RAL 9005	
Cooling	Convection	
Motor-only mass	26	kg
Max. axial force 20kh	165	N
Max. radial force 20kh*	871	N
Max. axial force 100kh	97	N
Max. radial force 100kh*	509	N

** Defined for point of action at ½ output shaft length*

Sensors	
Temperature	PT1000 {PT1000}
Feedback	EDS35 (HDSL) single-turn, 24 bits

Gearbox engineering data		
Gear ratio	50	
Efficiency*	95	%
Torsional stiffness	614	Nm/arcmin
Number of stages	2	
Rated output torque	760	Nm
Cycling output torque	1420	Nm
Max output torque	1640	Nm
Emergency output torque	2850	Nm
Rated input speed	2750	rpm
Max input speed	6500	rpm
Operating temperature	<-25; 90>	°C
Max. backlash	< 1	arcmin
Service life	20000	h

** at rated speed & torque*

Gearbox mechanical data		
Radial force for 20'000h	33000	N
Radial force for 30'000h	29500	N
Max. radial force	33000	N
Axial force for 20'000h	25000	N
Axial force for 30'000h	25000	N
Max. axial force	29500	N
Tilting moment for 20'000h	4957	Nm
Tilting moment for 30'000h	4431	Nm
Max. bending moment	180	Nm
Output shaft design	Flange	
Mass	42.99	kg
Input inertia	7.102	kgcm²
Protection	IP65	

Lubrication	
Type	Standard
Lubricant	Castrol Optigear Synthetic 800/150

Actuator data		
Rated speed	40	rpm
Rated torque	760.00	Nm
Cycling torque	1420.00	Nm
Peak torque	1640.00	Nm
Emergency stop torque	2850.00	Nm
EMF constant ±10%	7700.0	V AC (rms) / 1000rpm
Torque constant ±10% @ rated load	100.16	Nm / A (rms)
Total mass	68.99	kg
Output inertia	135255.0	kgcm²

Torque / speed curve

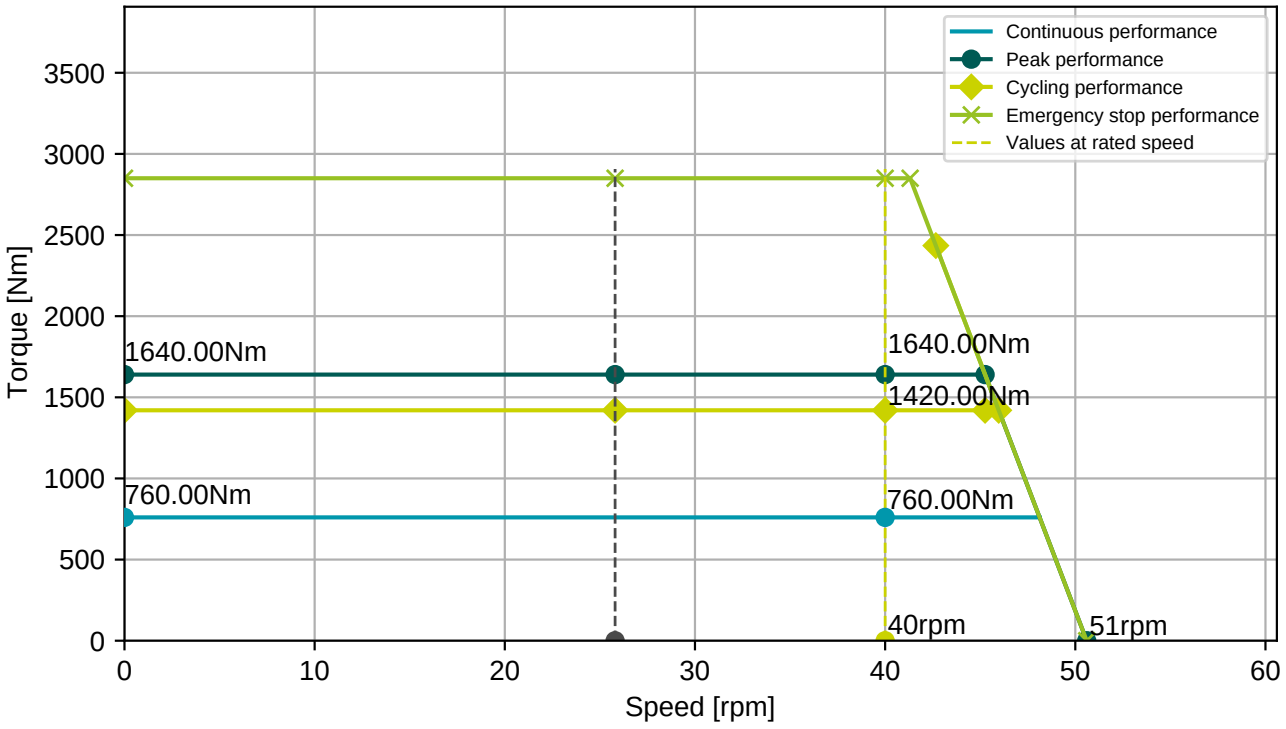

BGC110N00001216000

M23, 8 poles, rotary

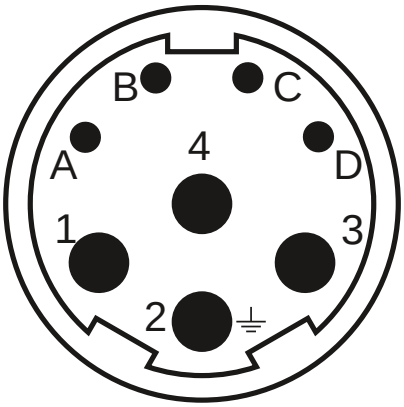

Connector 1 (283)	
1	U
4	V
3	W
2	PE
A	Brake+
B	Brake-
C	GND/DSL-
D	+Us/DSL+

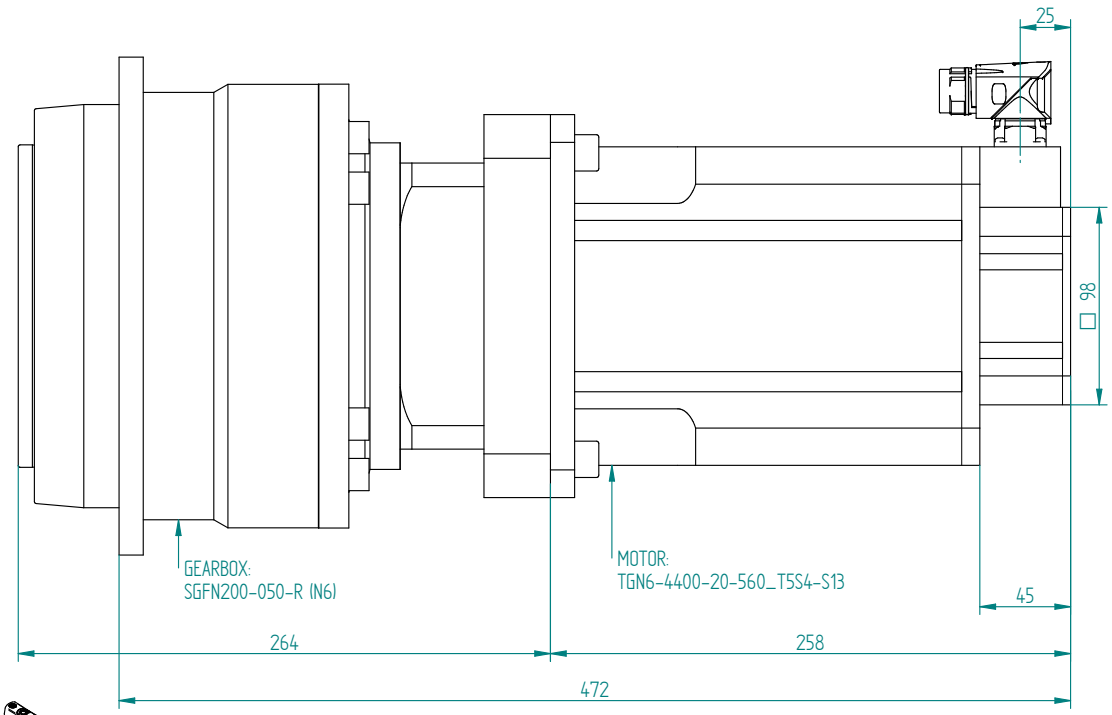

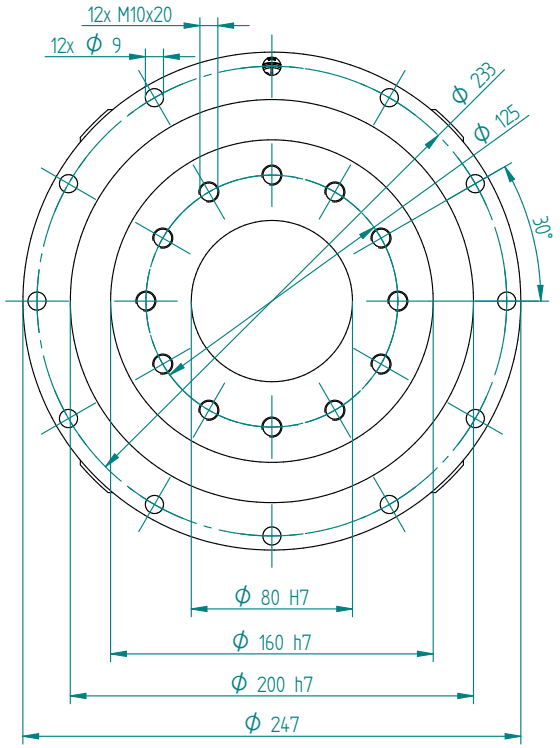

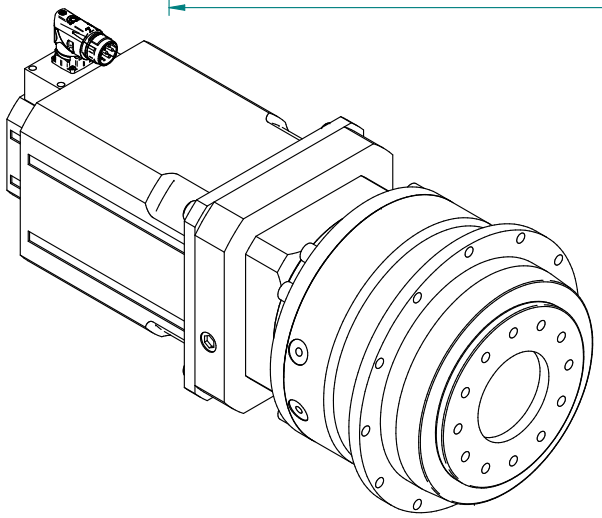

Bill of materials			
Part Name	Quantity	Type	Tools
Screw_DIN 912_A4 - 70 M12x40	4	A4 - 70	inbus - M12

Untolerated dimensions: ISO 2768 - m

Drawn:	Stepan Bednar	Created: 31.07.2025	Modified: 31.07.2025
Checked / approved by:	- - -	PROJECT NAME: Gearbox SGFN200-050-R (N6)	
Material:	-		
Semiprod.	- -	NUMBER - TITLE: SGFN200-050-R (N6)	
Project ID's			

UNLESS OTHERWISE SPECIFIED DIMENSIONS ARE IN MM
ANGLES ±X.XX° or ±X.XXX", 2 PL ±X.XX, 3 PL ±X.XXX

SIZE A3 | QUANTITY: - | REVISION: - - -

Designer: Bednar
Mail bednar@tgdrives.cz
Tel. +420 724 844 770

TG drives
Olomoucka 1290/79
627 00 Brno
Czech republic

SCALE :- | WEIGHT: - | SHEET 1 OF 3

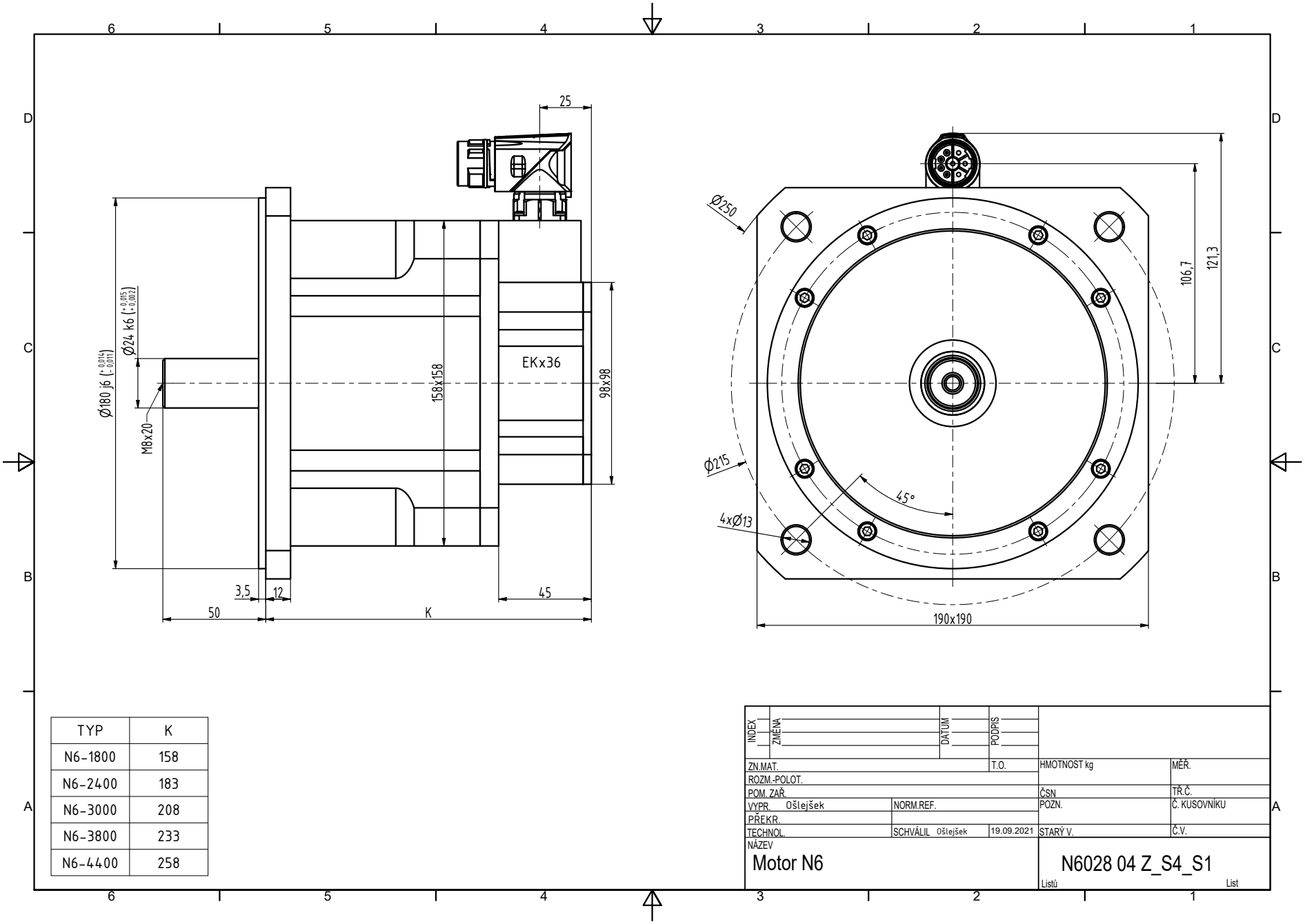

TYP	K
N6-1800	158
N6-2400	183
N6-3000	208
N6-3800	233
N6-4400	258

INDEX	ZMĚNA	DATUM	PODPIS

ZN.MAT.		T.O.	HMOTNOST kg	MĚŘ.
ROZM.-POLOT.				
POM. ZAŘ.			ČSN	TŘ.Č.
VYPR. Ošlejšek	NORM.REF.		POZN.	Č. KUSOVNÍKU
PŘEKR.				
TECHNOL.	SCHVÁLIL Ošlejšek	19.09.2021	STARÝ V.	Č.V.

NÁZEV
Motor N6

N6028 04 Z_S4_S1

Listů List

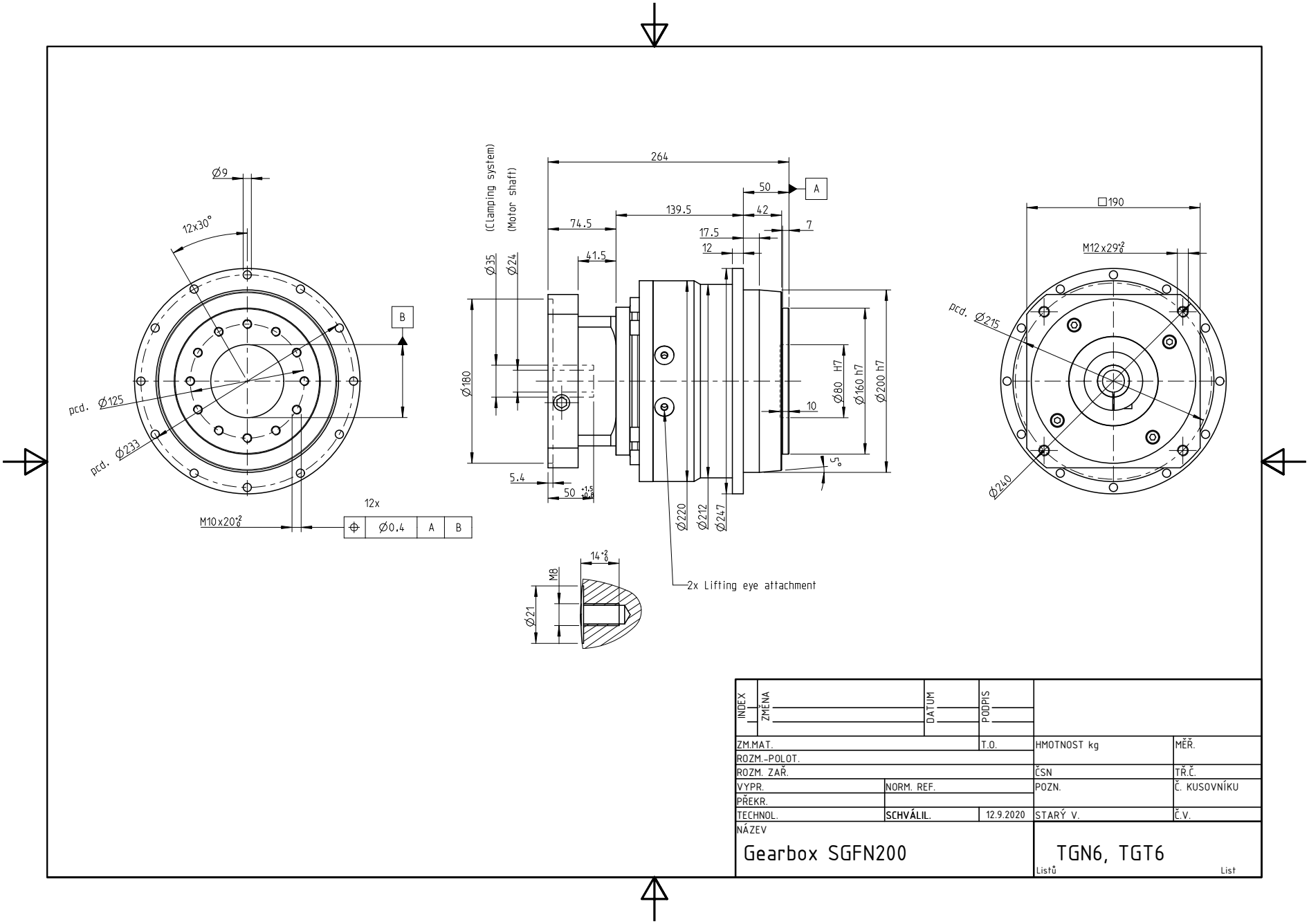

INDEX	ZMĚNA	DATUM	PODPIS	

ZM.MAT.		T.O.	HMOTNOST kg	MĚŘ.
ROZM.-POLOT.				
ROZM. ZAŘ.			ČSN	TŘ.Č.
VYPR.	NORM. REF.		POZN.	Č. KUSOVNÍKU
PŘEKR.				
TECHNOL.	SCHVÁLIL.	12.9.2020	STARÝ V.	Č.V.

NÁZEV

Gearbox SGFN200

TGN6, TGT6

Listů List