Engineering data (WIN 1609)		
DC bus voltage	48	V DC
Nominal AC voltage	33	V AC (rms)
Rated voltage	24	V AC (rms)
Rated power	346	W
Rated speed	3000	rpm
Rated torque	1.10	Nm
Rated current	11.14	A (rms)
Peak torque	4.94	Nm
Peak current	53.7	A (rms)
Stall torque	1.3	Nm
Stall current	11.4	A (rms)
No load speed	4740	rpm
EMF constant ±10%	6.91	V AC (rms) / 1000rpm
Theoretical torque constant ±10%	0.114	Nm / A (rms)
Torque constant ±10% @ rated load	0.099	Nm / A (rms)
Number of poles	10	
Electrical time constant	1.20	ms
Winding terminal resistance	0.275	Ω
Rotary field terminal inductance	0.33	mH

Customs info	
HS Code	85015100

Mechanical data (setting 48)		
Max mechanical speed	12000	rpm
Mech. time constant	1.82	ms
Thermal time constant	24	min
Rotor inertia	0.5	kgcm²
Protection	IP64	
Color	RAL 9005	
Cooling	Convection	

Sensors	
Temperature	PT1000 {PT1000}
Feedback	EEM37 (HDSL) multi-turn, 17+12 bits

Brake		
Braking torque	4.50	Nm
Voltage	24	V DC
Power @20°C	12.0	W
Current @20°C	0.50	A
Inertia	0.20	kgcm²
Mass	0.47	kg

Torque / speed curve

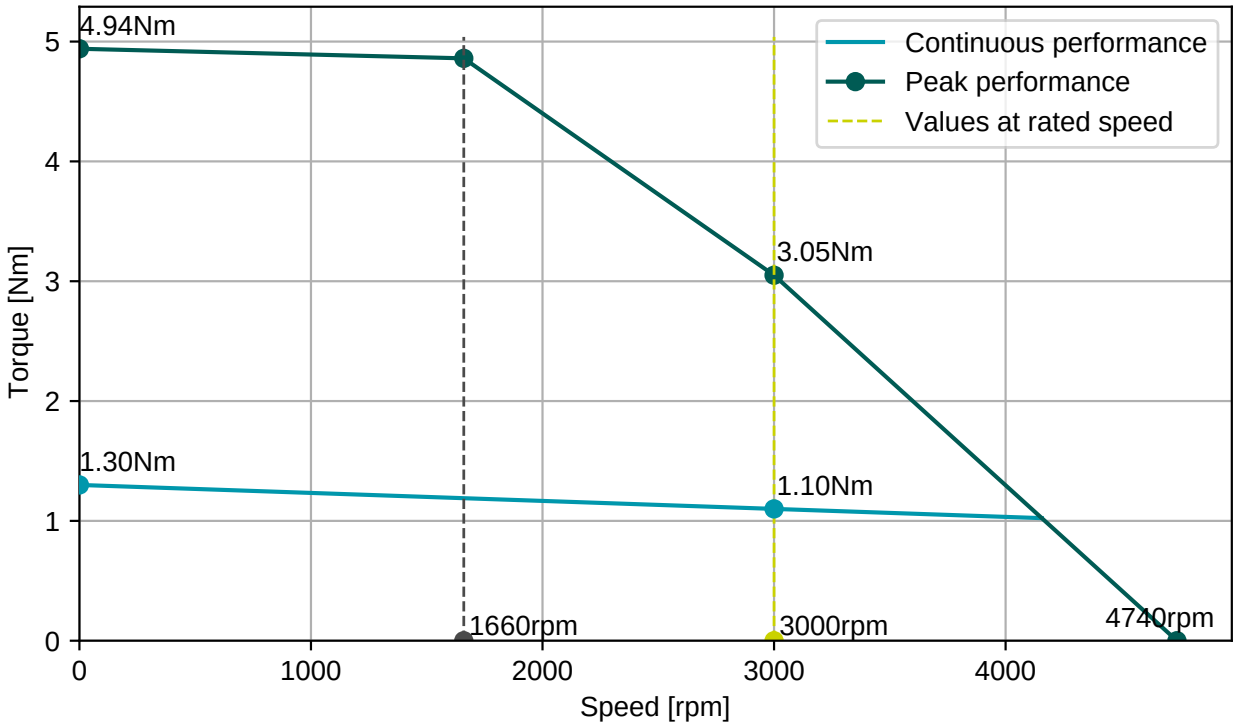

EGA101N00000001000

2x M15, 9 and 12 poles rotary

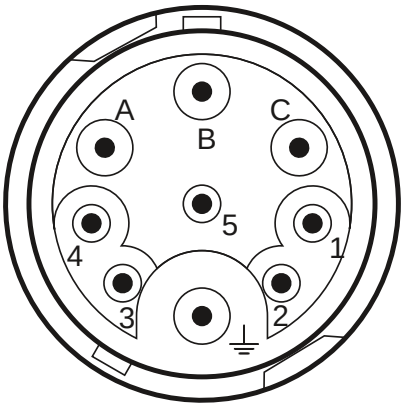

Connector 1 (304)	
A	U
B	V
C	W
PE	PE
1	Brake+
2	Brake-
3	+Us/DSL+
4	GND/DSL-

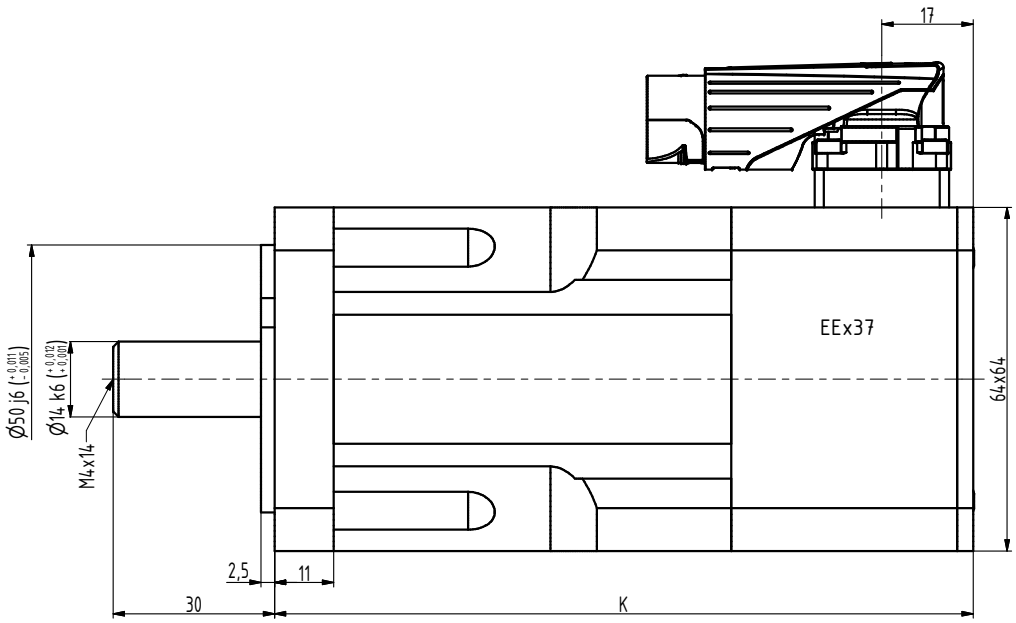

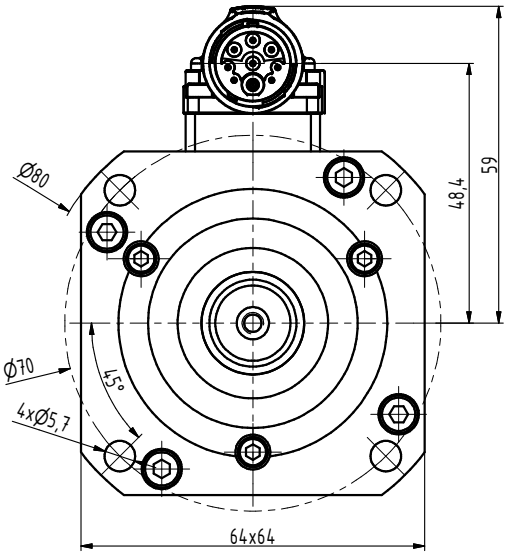

TYP	K
MA-0075	112
MA-0130	130
MA-0175	148
MA-0220	166
MA-0300	202

INDEX	ZMĚNA	DATUM	PODPIS		
ZN.MAT.		T.O.	HMOTNOST kg	MĚŘ.	
ROZM.-POLOT.					
POM. ZAŘ.			ČSN	TŘ.Č.	
VYPR. Ošlejšek	NORM.REF.		POZN.	Č. KUSOVNÍKU	
PŘEKR.					
TECHNOL.	SCHVÁLIL Ošlejšek	05.12.2024	STARÝ V.	Č.V.	
NÁZEV: Motor MA			MA007 03 Z_I_S1		
			Listů	List	