Engineering motordata (WIN 978)		
DC bus voltage	48	V DC
Nominal AC voltage	33	V AC (rms)
Rated voltage	25	V AC (rms)
Rated power	160	W
Rated speed	3000	rpm
Rated torque	0.51	Nm
Rated current	6.01	A (rms)
Peak torque	2.16	Nm
Peak current	27.5	A (rms)
Stall torque	0.54	Nm
Stall current	6	A (rms)
No load speed	5930	rpm
EMF constant ±10%	5.5	V AC (rms) / 1000rpm
Theoretical torque constant ±10%	0.09	Nm / A (rms)
Torque constant ±10% @ rated load	0.08	Nm / A (rms)
Number of poles	6	
Electrical time constant	1.21	ms
Winding terminal resistance	0.99	Ω
Rotary field terminal inductance	1.2	mH

Customs info	
HS Code	85015100

Mechanical motor data (setting 48)		
Max mechanical speed	12000	rpm
Mech. time constant	1.45	ms
Thermal time constant	12	min
Rotor inertia	0.07	kgcm²
Protection	IP64	
Color	RAL 9005	
Cooling	Convection	
Motor-only mass	0.9	kg
Max. axial force 20kh	48	N
Max. radial force 20kh*	254	N
Max. axial force 100kh	28	N
Max. radial force 100kh*	149	N

** Defined for point of action at ½ output shaft length*

Sensors	
Temperature	PT1000 {PT1000}
Feedback	EEM37 (HDSL) multi-turn, 17+12 bits

Brake		
Braking torque	2.00	Nm
Voltage	24	V DC
Power @20°C	11.0	W
Current @20°C	0.46	A
Inertia	0.08	kgcm²
Mass	0.20	kg

Gearbox engineering data		
Gear ratio	12	
Efficiency*	96	%
Torsional stiffness	5.7	Nm/arcmin
Number of stages	2	
Rated output torque	24	Nm
Cycling output torque	33	Nm
Max output torque	48	Nm
Emergency output torque	88	Nm
Rated input speed	4500	rpm
Max input speed	13000	rpm
Operating temperature	<-25; 90>	°C
Max. backlash	< 12	arcmin
Service life	20000	h

** at rated speed & torque*

Lubrication	
Type	Standard
Lubricant	Grease (lifetime lubrication)

Gearbox mechanical data		
Radial force for 20'000h*	1050	N
Radial force for 30'000h*	900	N
Max. radial force*	1650	N
Axial force for 20'000h	1350	N
Axial force for 30'000h	1000	N
Max. axial force	2100	N
Tilting moment for 20'000h	42	Nm
Tilting moment for 30'000h	36	Nm
Max. bending moment	12	Nm
Output shaft design	Shaft key	
Mass	1.7	kg
Input inertia	0.121	kgcm²
Protection	IP54	

** Defined for point of action at ½ output shaft length*

Actuator data		
Rated speed	250	rpm
Rated torque	5.88	Nm
Cycling torque	24.88	Nm
Peak torque	24.88	Nm
Emergency stop torque	25.92	Nm
EMF constant ±10%	66.0	V AC (rms) / 1000rpm
Torque constant ±10% @ rated load	0.98	Nm / A (rms)
Total mass	2.80	kg
Output inertia	27.5	kgcm²

Torque / speed curve

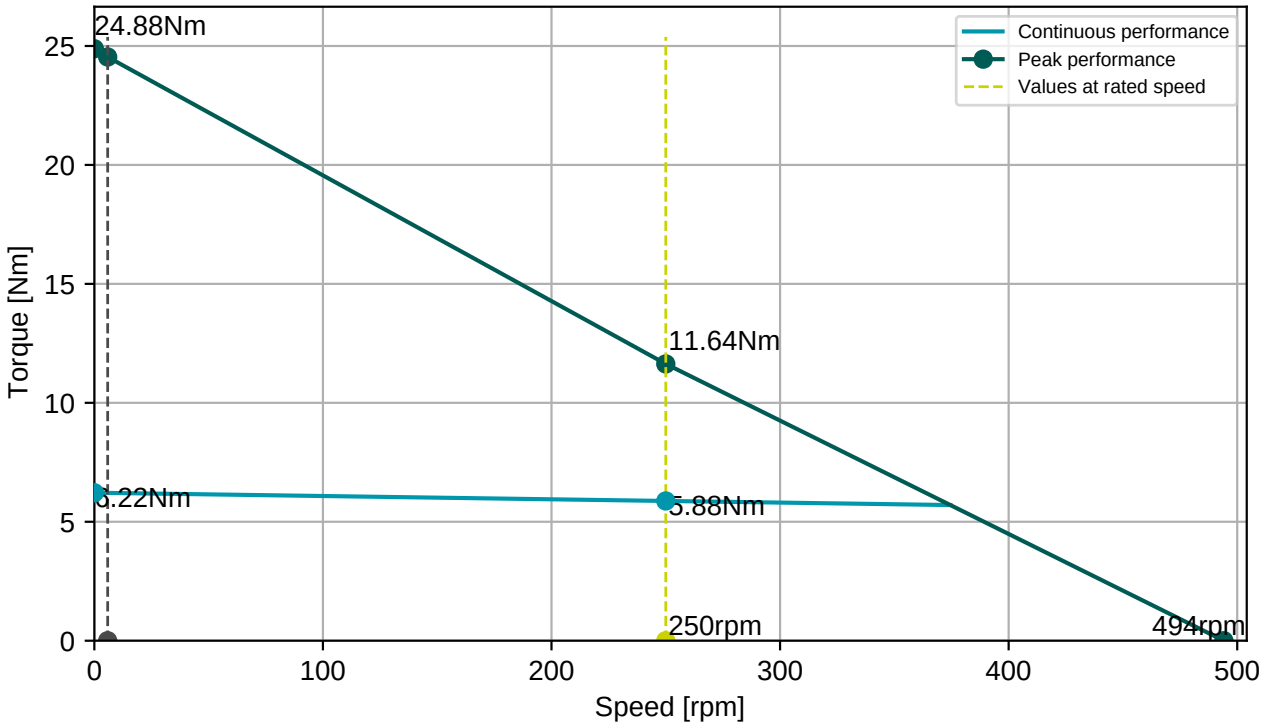

EGA201N00000800000

M15, 9 poles, rotary

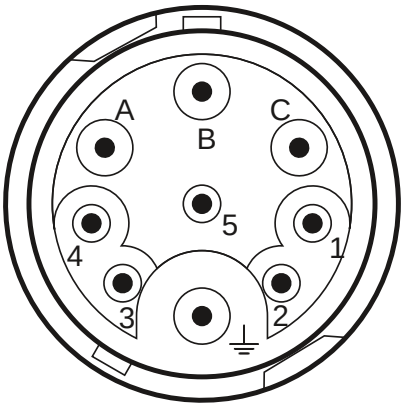

Connector 1 (304)	
A	U
B	V
C	W
PE	PE
1	Brake+
2	Brake-
3	+Us/DSL+
4	GND/DSL-

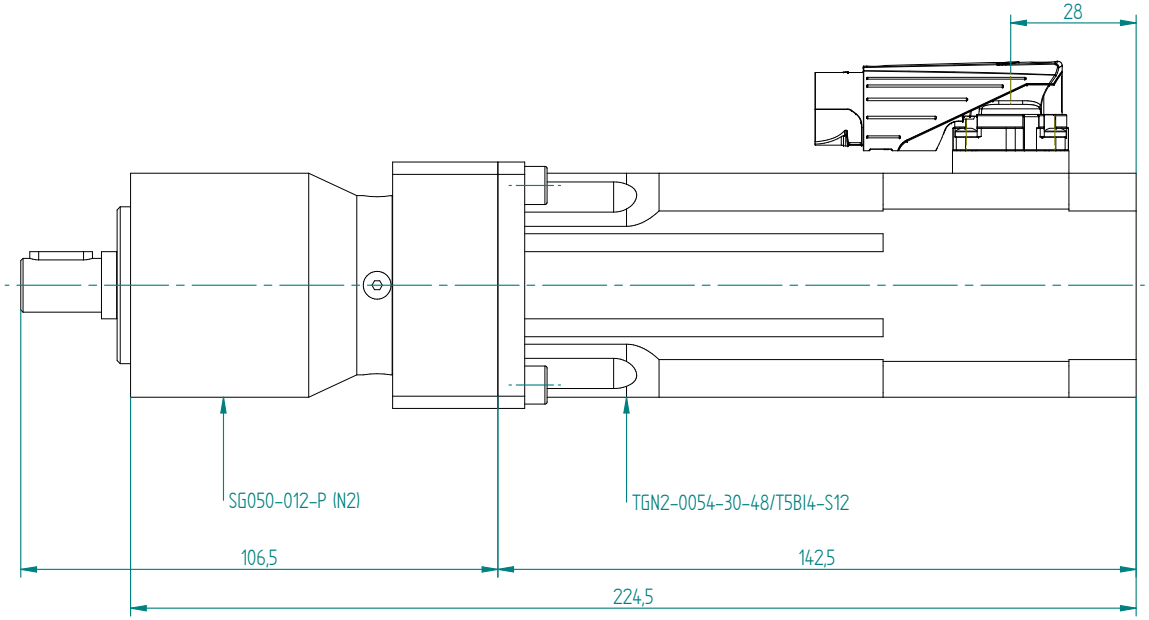

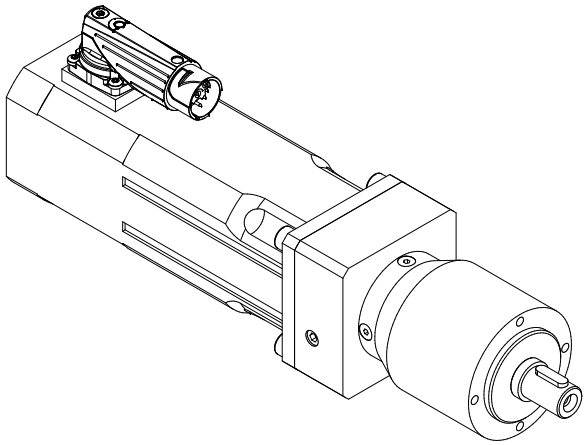

Bill of materials			
Part Name	Quantity	Type	Tools
Screw_DIN 912_A4 - 70_M5x16	4	A4 - 70	inbus - M5

Untolerated dimensions: ISO 2768 - m

Drawn:	Stepan Bednar	Created: 23.06.2025	Modified: 23.06.2025
Checked / approved by:	- - -	PROJECT NAME: Gearbox SG050-012-P (N2)	
Material:	-		
Semiprod.	- -	NUMBER - TITLE: SG050-012-P (N2)	
Project ID's			

UNLESS OTHERWISE SPECIFIED DIMENSIONS ARE IN MM
ANGLES ±X.XX° or ±X.XXX", 2 PL ±X.XX, 3 PL ±X.XXX

SIZE A3 | QUANTITY: - | REVISION: - - -

Designer: Bednar
Mail bednar@tgdrives.cz
Tel: +420 724 844 770

TG drives
Olomoucka 1290/79
627 00 Brno
Czech republic

SCALE: - | WEIGHT: - | SHEET 1 OF 3

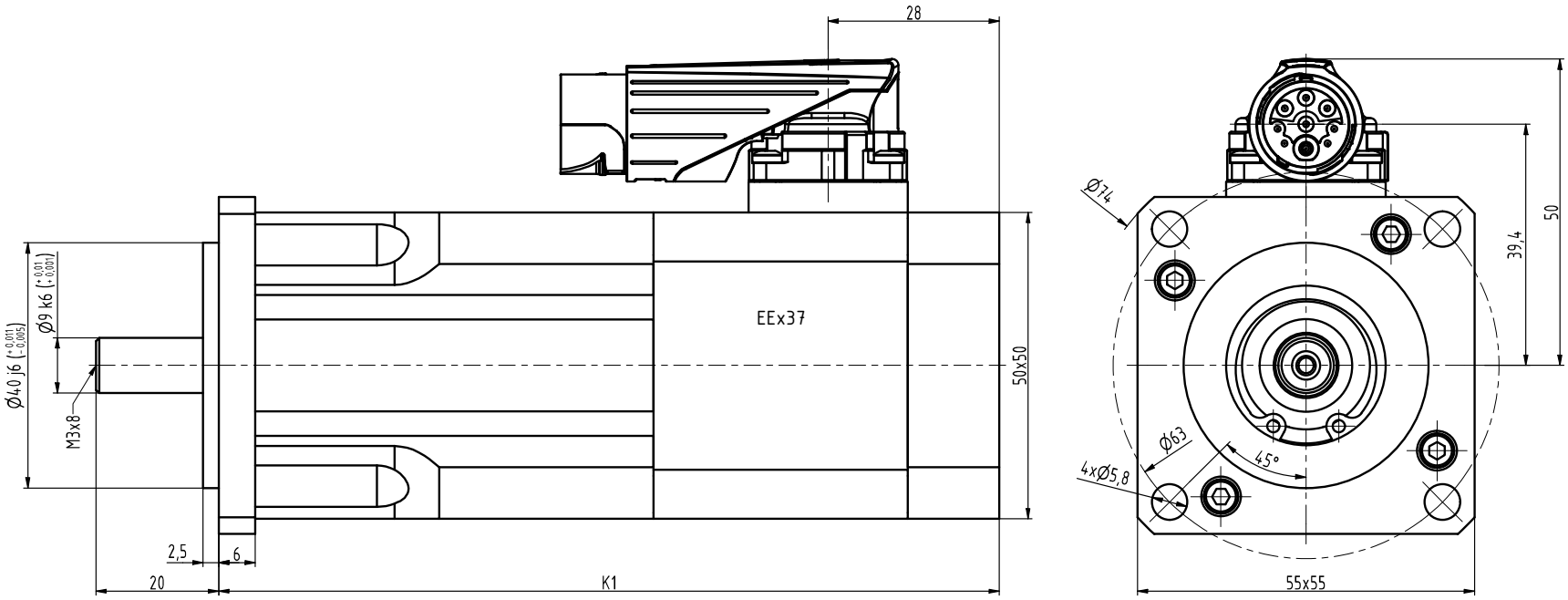

TYP	K1
N2-0028	127,5
N2-0054	142,5
N2-0075	157,5
N2-0095	172,5

INDEX	ZMĚNA	DATUM	PODPIS

ZN.MAT.		T.O.	HMOTNOST kg	MĚŘ.
ROZM.-POLOT.				
POM.ZAŘ.			ČSN	TŘ.Č.
VYPR. Ošlejšek	NORM.REF.		POZN.	Č. KUSOVNÍKU
PŘEKR.				
TECHNOL.	SCHVÁLIL Ošlejšek	01.07.2021	STARÝ V.	Č.V.

NÁZEV
Motor N2

N2068 05 B Z_I_S1

Listů List

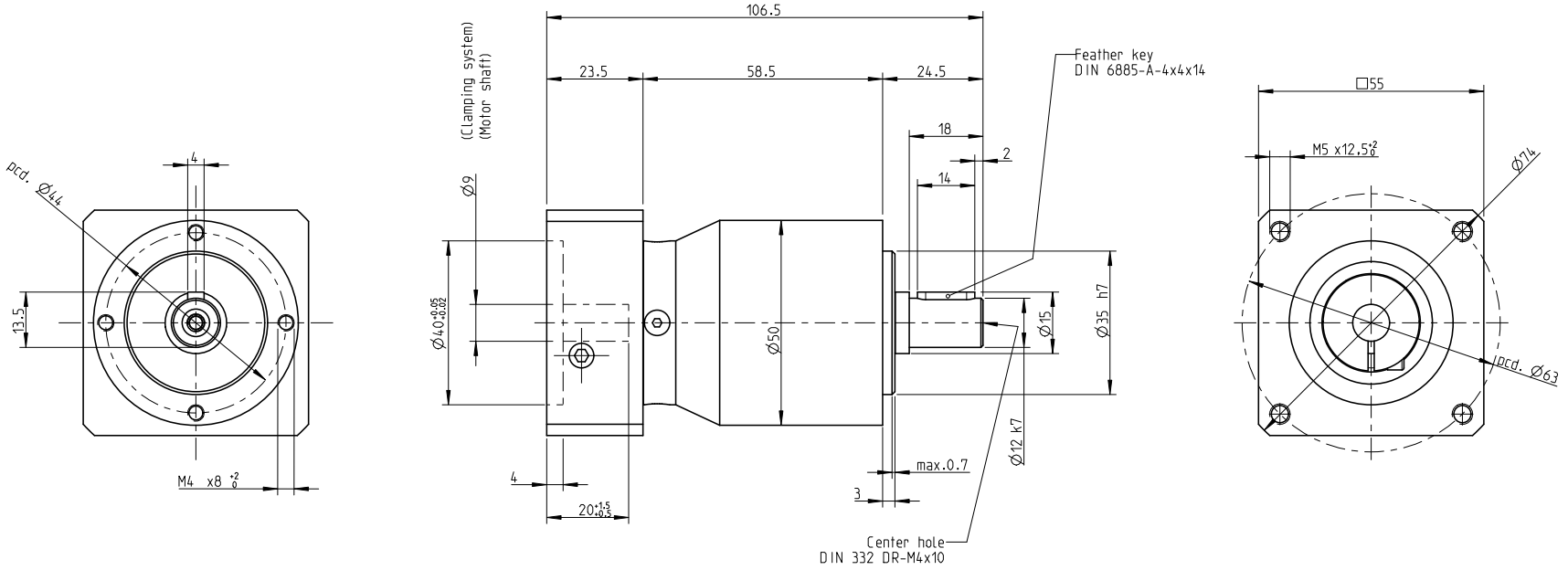

INDEX	ZMĚNA	DATUM	PODPIS	

ZM.MAT.		T.O.	HMOTNOST kg	MĚŘ.
ROZM.-POLOT.				
ROZM. ZAŘ.			ČSN	TŘ.Č.
VYPR.	NORM. REF.		POZN.	Č. KUSOVNÍKU
PŘEKR.				
TECHNOL.	SCHVÁLIL.	12.9.2020	STARÝ V.	Č.V.

NÁZEV

Gearbox SG050

TGN2, TGT2, TGH2

Listů List