| Engineering data (WIN 1364) | | |
|---|---|---|
| DC bus voltage | 48 | V DC |
| Nominal AC voltage | 33 | V AC (rms) |
| Rated voltage | 21 | V AC (rms) |
| Rated power | 1.0 | kW |
| Rated speed | 3000 | rpm |
| Rated torque | 3.20 | Nm |
| Rated current | 31.82 | A (rms) |
| Peak torque | 11.1 | Nm |
| Peak current | 153.8 | A (rms) |
| Stall torque | 4.05 | Nm |
| Stall current | 38.6 | A (rms) |
| No load speed | 5190 | rpm |
| EMF constant ±10% | 6.35 | V AC (rms) / 1000rpm |
| Theoretical torque constant ±10% | 0.105 | Nm / A (rms) |
| Torque constant ±10% @ rated load | 0.101 | Nm / A (rms) |
| Number of poles | 10 | |
| Electrical time constant | 4.44 | ms |
| Winding terminal resistance | 0.027 | Ω |
| Rotary field terminal inductance | 0.12 | mH |

| Customs info | |
|---|---|
| HS Code | 85015220 |

| Mechanical data (setting 48) | | |
|---|---|---|
| Max mechanical speed | 9000 | rpm |
| Mech. time constant | 1.02 | ms |
| Thermal time constant | 37 | min |
| Rotor inertia | 2.4 | kgcm² |
| Protection | IP64 | |
| Color | RAL 9005 | |
| Cooling | Convection | |
| Motor-only mass | 4 | kg |

| Sensors | |
|---|---|
| Temperature | PT1000 {PT1000} |
| Feedback | EEM37 (HDSL) multi-turn, 17+12 bits |

Torque / speed curve

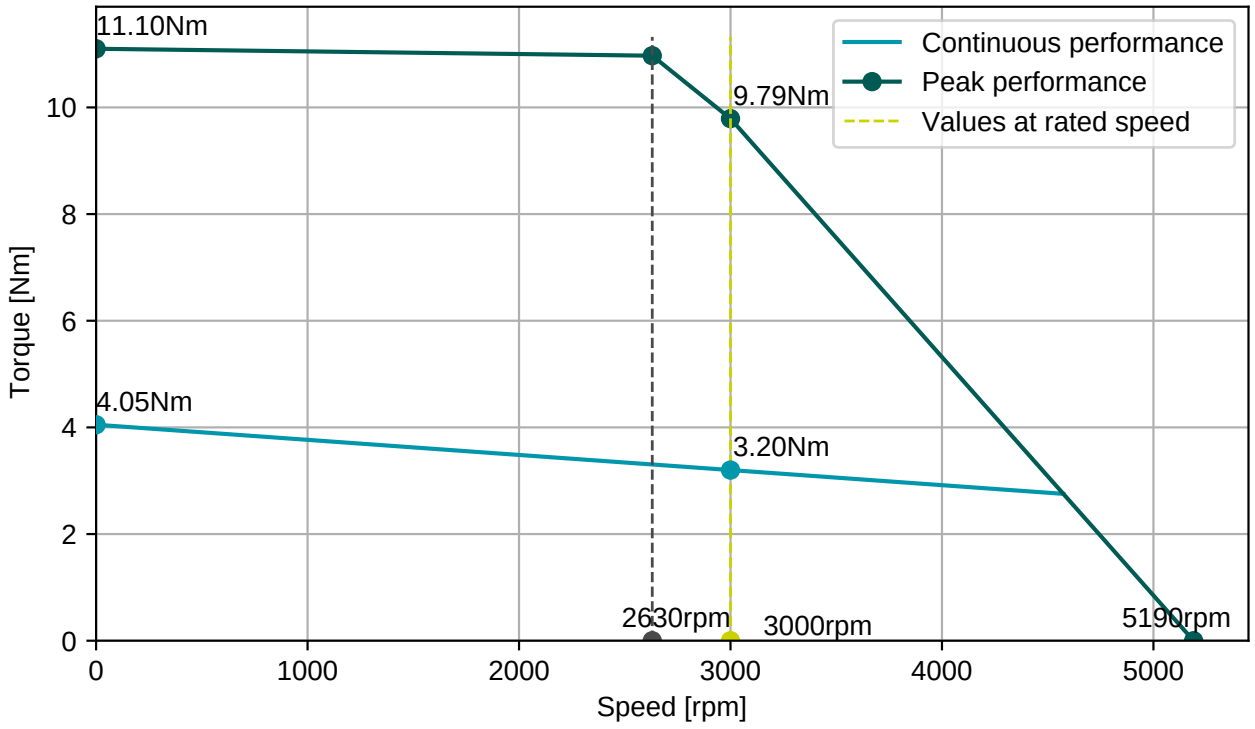


**CEA271N00000051000**

M40, 8 poles, rotary base

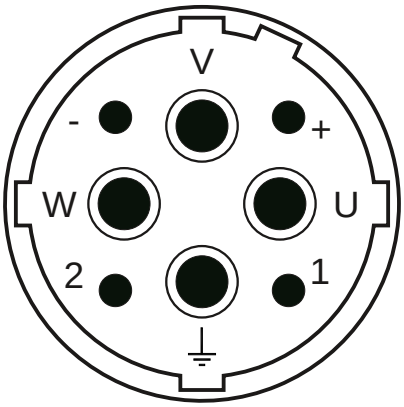


| Connector 1 (151) | |
|---|---|
| **U** | U |
| **V** | V |
| **W** | W |
| **PE** | PE |
| **+** | Brake+ |
| **-** | Brake- |
| **1** | Therm+ |
| **2** | Therm- |

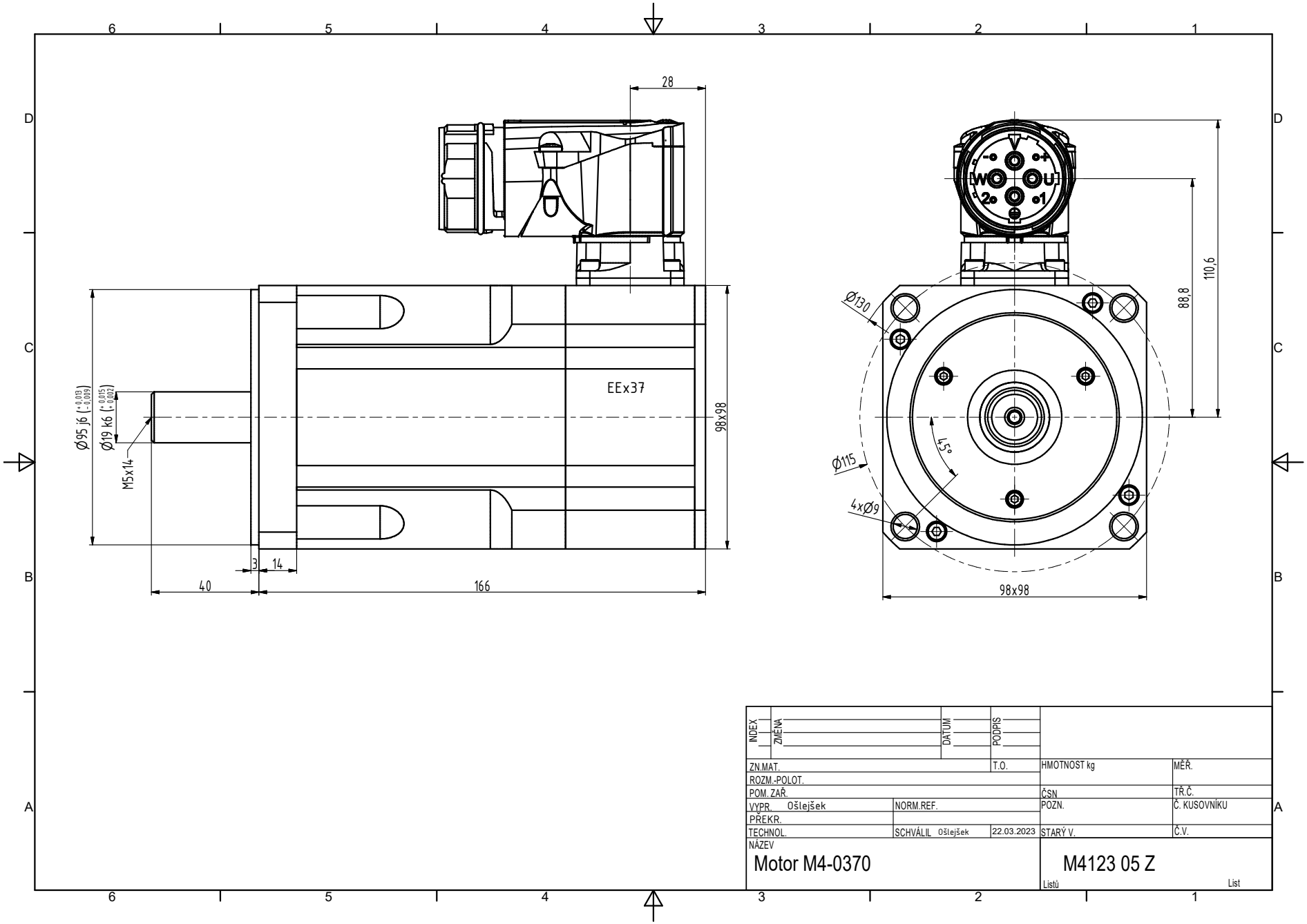
28
EEx37
98x98
Ø95 j6 (+0,013 -0,009)
Ø19 k6 (+0,015 +0,002)
M5x14
3
14
40
166
Ø130
88,8
110,6
Ø115
4xØ9
45°
98x98
INDEX
ZMĚNA
DATUM
PODPIS
ZN.MAT.
T.O.
HMOTNOST kg
MĚŘ.
ROZM.-POLOT.
POM. ZAŘ.
ČSN
TŘ.Č.
VYPR. Ošlejšek
NORM.REF.
POZN.
Č. KUSOVNÍKU
PŘEKR.
TECHNOL.
SCHVÁLIL Ošlejšek
22.03.2023
STARÝ V.
Č.V.
NÁZEV
Motor M4-0370
M4123 05 Z
Listů
List