Engineering motordata (WIN 1557)		
DC bus voltage	48	V DC
Nominal AC voltage	33	V AC (rms)
Rated voltage	27	V AC (rms)
Rated power	911	W
Rated speed	3000	rpm
Rated torque	2.90	Nm
Rated current	24.07	A (rms)
Peak torque	9.45	Nm
Peak current	103.5	A (rms)
Stall torque	3.25	Nm
Stall current	23.7	A (rms)
No load speed	3970	rpm
EMF constant ±10%	8.28	V AC (rms) / 1000rpm
Theoretical torque constant ±10%	0.137	Nm / A (rms)
Torque constant ±10% @ rated load	0.120	Nm / A (rms)
Number of poles	10	
Electrical time constant	2.89	ms
Winding terminal resistance	0.083	Ω
Rotary field terminal inductance	0.24	mH

Customs info	
HS Code	85015220

Mechanical motor data (setting 48)		
Max mechanical speed	12000	rpm
Mech. time constant	0.84	ms
Thermal time constant	34	min
Rotor inertia	1.1	kgcm²
Protection	IP64	
Color	RAL 9005	
Cooling	Convection	
Motor-only mass	2	kg

Sensors	
Temperature	PT1000 {PT1000}
Feedback	EEM37 (HDSL) multi-turn, 17+12 bits

Brake		
Braking torque	4.50	Nm
Voltage	24	V DC
Power @20°C	12.0	W
Current @20°C	0.50	A
Inertia	0.20	kgcm²
Mass	0.47	kg

Gearbox engineering data		
Gear ratio	32	
Efficiency*	92	%
Torsional stiffness	9.6	Nm/arcmin
Number of stages	2	
Rated output torque	102	Nm
Cycling output torque	120	Nm
Max output torque	192	Nm
Emergency output torque	240	Nm
Rated input speed	4000	rpm
Max input speed	7000	rpm
Operating temperature	<-25; 90>	°C
Max. backlash	< 15	arcmin
Service life	20000	h

** at rated speed & torque*

Lubrication	
Type	Standard
Lubricant	Grease (lifetime lubrication)

Gearbox mechanical data		
Radial force for 20'000h*	750	N
Radial force for 30'000h*	650	N
Max. radial force*	1250	N
Axial force for 20'000h	1000	N
Axial force for 30'000h	900	N
Max. axial force	1600	N
Tilting moment for 20'000h	31	Nm
Tilting moment for 30'000h	27	Nm
Max. bending moment	16	Nm
Output shaft design	Shaft key	
Mass	4.15	kg
Input inertia	0.869	kgcm²
Protection	IP54	

** Defined for point of action at ½ output shaft length*

Actuator data		
Rated speed	94	rpm
Rated torque	85.38	Nm
Cycling torque	120.00	Nm
Peak torque	192.00	Nm
Emergency stop torque	240.00	Nm
EMF constant ±10%	265.0	V AC (rms) / 1000rpm
Torque constant ±10% @ rated load	3.55	Nm / A (rms)
Total mass	6.62	kg
Output inertia	2016.3	kgcm²

Torque / speed curve

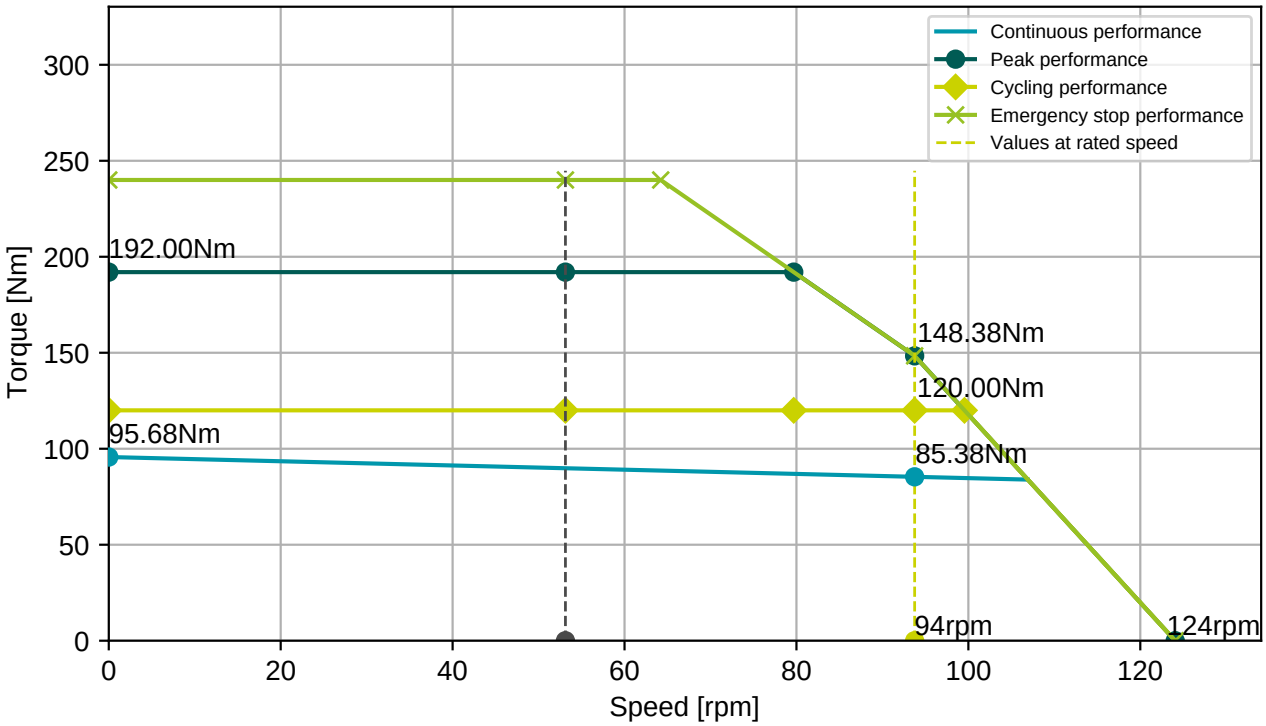

BGC110N00001216000

M23, 8 poles, rotary

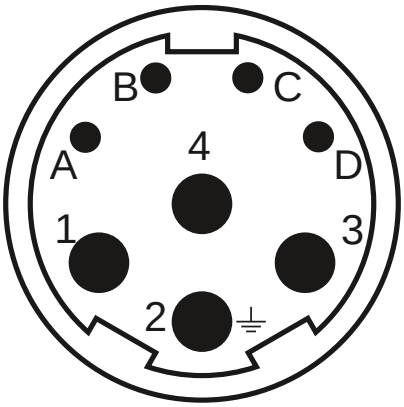

Connector 1 (283)	
1	U
4	V
3	W
2	PE
A	Brake+
B	Brake-
C	GND/DSL-
D	+Us/DSL+

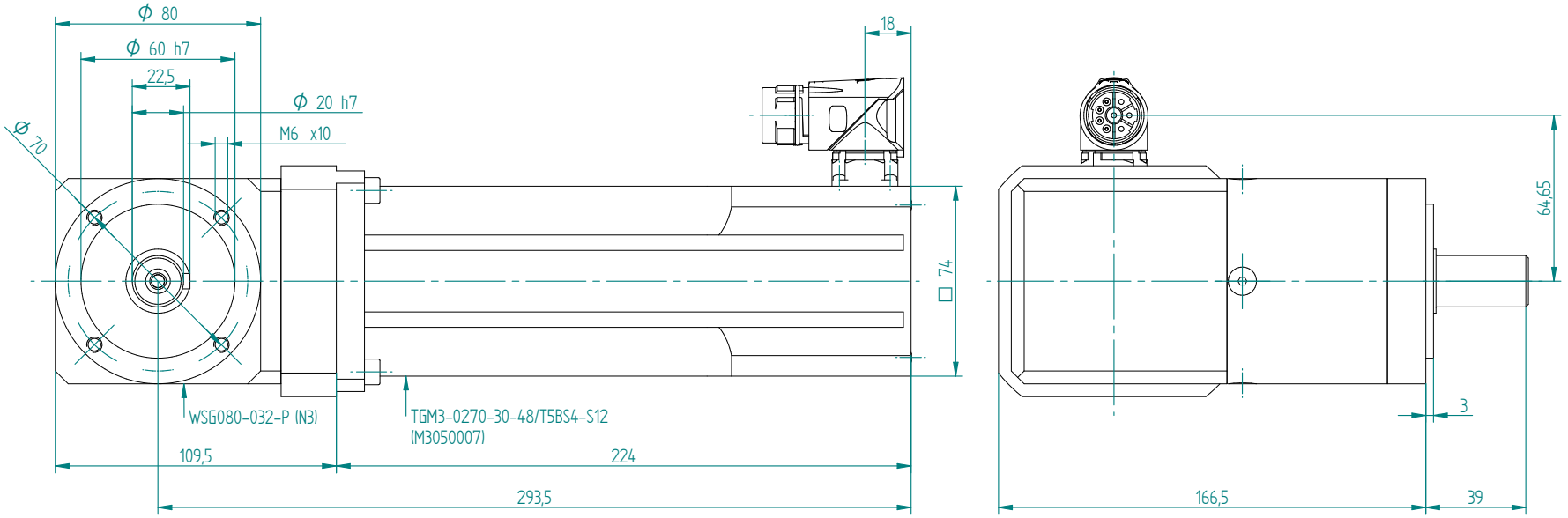

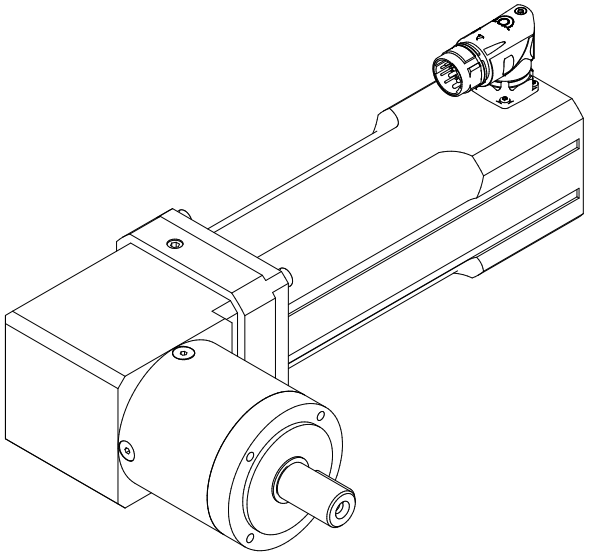

Bill of materials			
Part Name	Quantity	Type	Tools
Screw_DIN 912_A4 - 70_M6x25	4	A4 - 70	inbus - M6

Drawn:	Stepan Bednar	Created: 13.06.2025	Modified: 13.06.2025
Checked / approved by:	- - -	PROJECT NAME: Gearbox WSG080-032-P (N3)	
Material:			
Semiprod.		NUMBER - TITLE: WSG080-032-P (N3)	
Project ID's			

UNLESS OTHERWISE SPECIFIED DIMENSIONS ARE IN MM
ANGLES ±X.XX° or ±X.XXX", 2 PL ±X.XX, 3 PL ±X.XXX

SIZE A3 | QUANTITY: | REVISION: - - -

Designer: Bednar
Mail bednar@tgdrives.cz
Tel: +420 724844770

TG drives
Olomoucka 1290/79
627 00 Brno
Czech republic

SCALE : | WEIGHT: | SHEET 1 OF 3

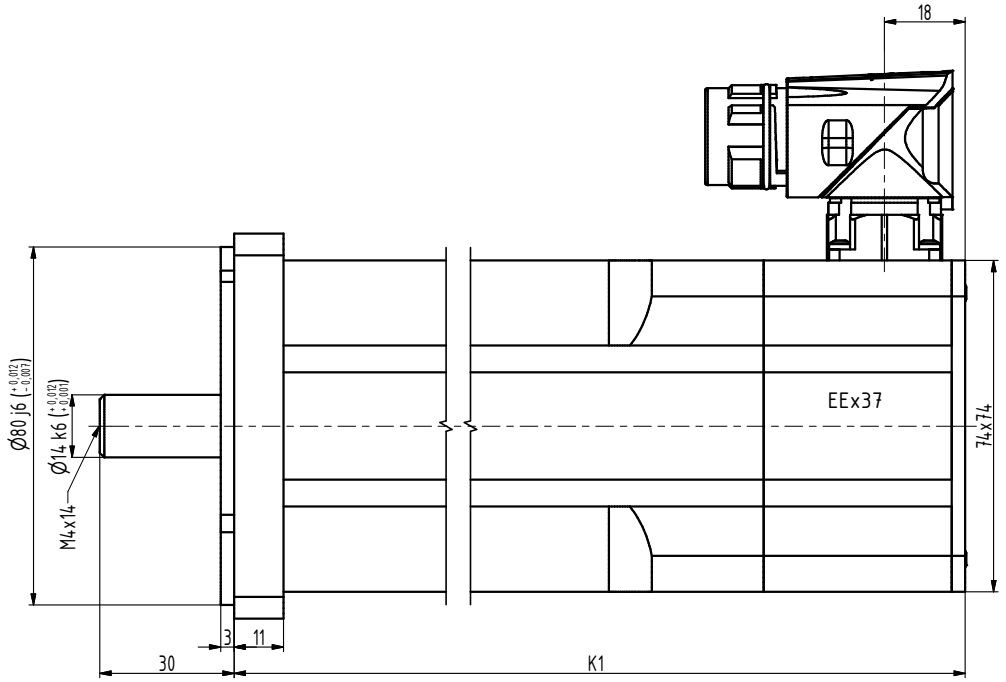

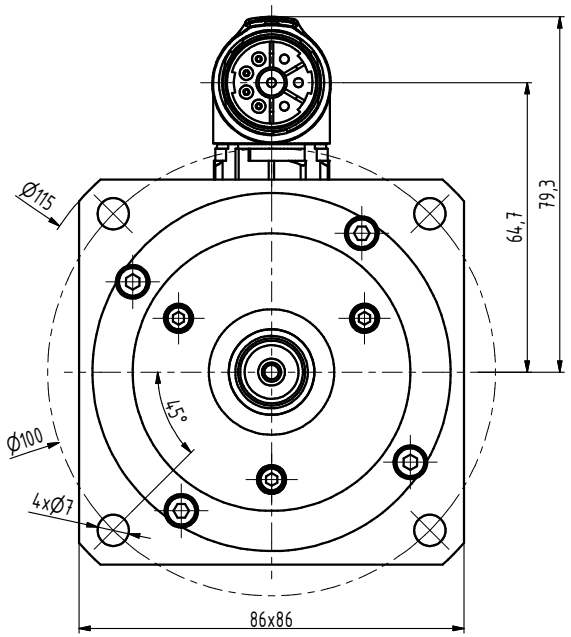

TYP	K1
M3-0160	188
M3-0270	224

INDEX	ZMĚNA	DATUM	PODPIS

ZN.MAT.		T.O.	HMOTNOST kg	MĚŘ.	
ROZM.-POLOT.					
POM. ZAŘ.			ČSN	TŘ.Č.	
VYPR. Ošlejšek	NORM.REF.		POZN.	Č. KUSOVNÍKU	
PŘEKR.					
TECHNOL.	SCHVÁLIL Ošlejšek	24.11.2021	STARÝ V.	Č.V.	

NÁZEV
Motor M3

M3138 02 B Z_S4_S1

Listů List

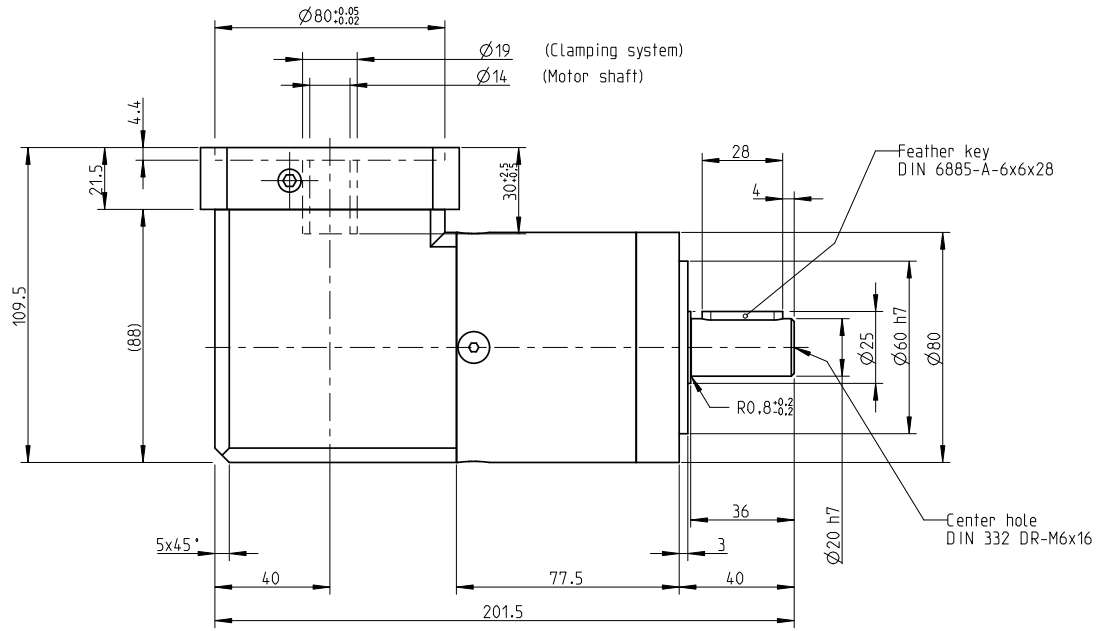

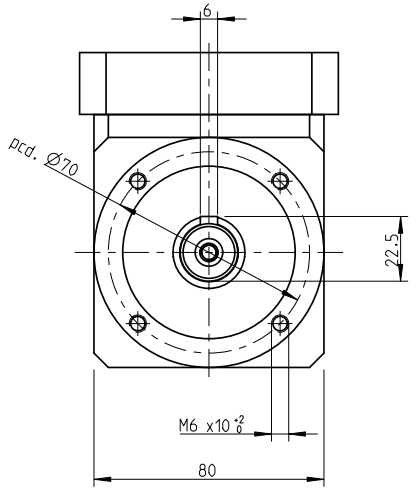

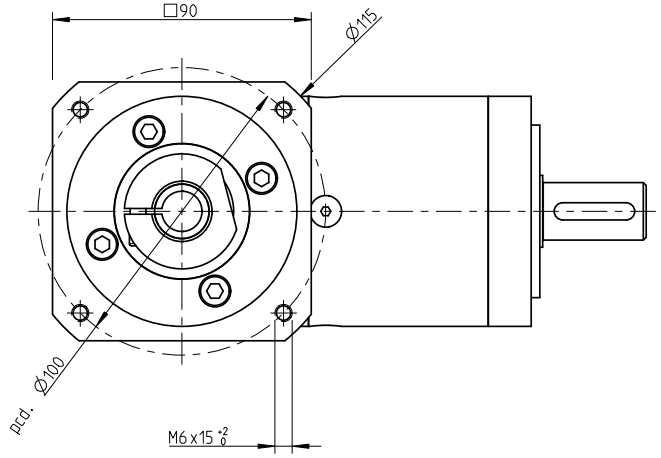

INDEX	ZMĚNA	DATUM	PODPIS		
ZM.MAT.			T.O.	HMOTNOST kg	MĚŘ.
ROZM.-POLOT.					
ROZM. ZAŘ.				ČSN	TŘ.Č.
VYPR.		NORM. REF.		POZN.	Č. KUSOVNÍKU
PŘEKR.					
TECHNOL.		SCHVÁLIL.	12.9.2020	STARÝ V.	Č.V.

NÁZEV

Gearbox WSG080

TGN3, TGT3, TGH3

Listů List