Engineering data (WIN 1674)		
DC bus voltage	560	V DC
Nominal AC voltage	330	V AC (rms)
Rated voltage	172	V AC (rms)
Rated power	113	W
Rated speed	6000	rpm
Rated torque	0.18	Nm
Rated current	0.5	A (rms)
Peak torque	0.8	Nm
Peak current	2.3	A (rms)
Stall torque	0.2	Nm
Stall current	0.53	A (rms)
No load speed	14230	rpm
EMF constant ±10%	23	V AC (rms) / 1000rpm
Theoretical torque constant ±10%	0.38	Nm / A (rms)
Torque constant ±10% @ rated load	0.36	Nm / A (rms)
Number of poles	6	
Electrical time constant	0.36	ms
Winding terminal resistance	54.132	Ω
Rotary field terminal inductance	19.7	mH

Customs info	
HS Code	85015100

Mechanical data (setting 31)		
Max mechanical speed	12000	rpm
Mech. time constant	3.89	ms
Thermal time constant	20	min
Rotor inertia	0.06	kgcm²
Protection	IP64	
Color	RAL 9005	
Cooling	Convection	
Motor-only mass	0.7	kg

Sensors	
Temperature	PT1000 {PT1000}
Feedback	2-pole resolver size 10

Note
Cables length 2 m

Torque / speed curve

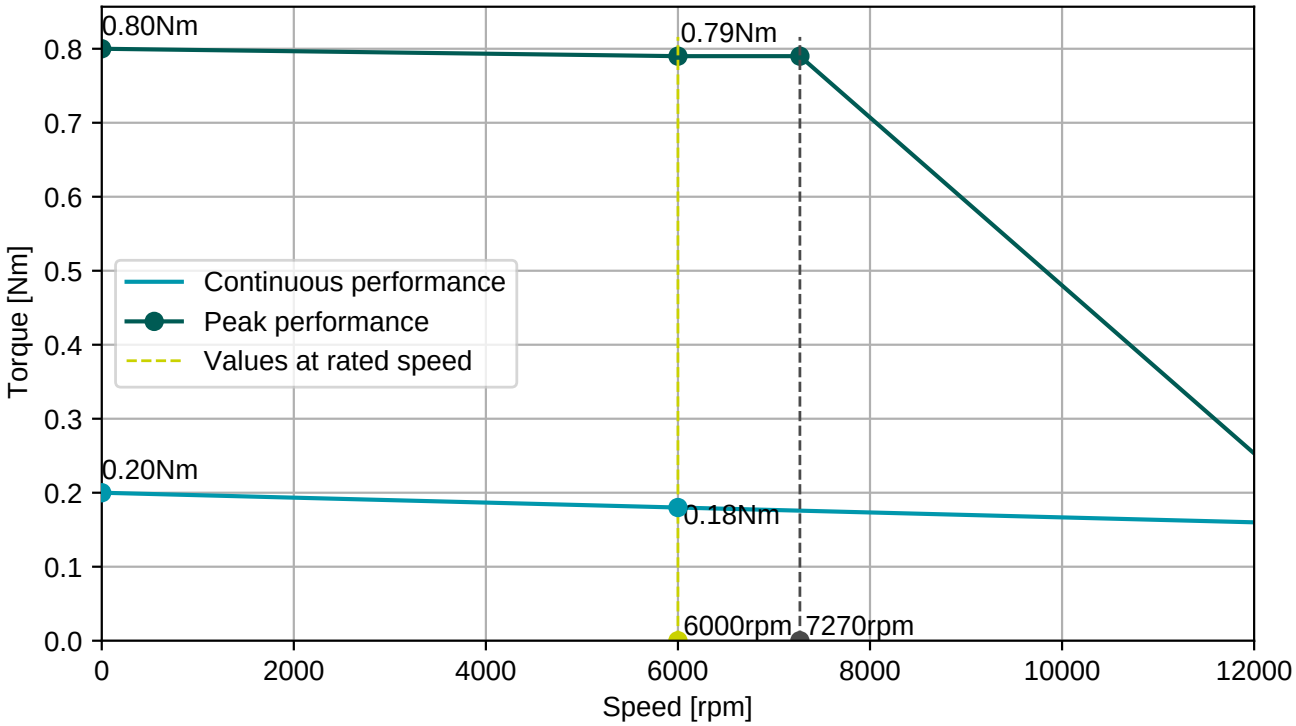

Connector 1 (22)	
white	R1
brown	R2
grey	S1
green	S2
pink	S3
yellow	S4
red	Therm+
blue	Therm-

Connector 2 (16)	
1	U
2	V
3	W
4	Brake+
5	Brake-
PE	PE

Numbers printed on the cables

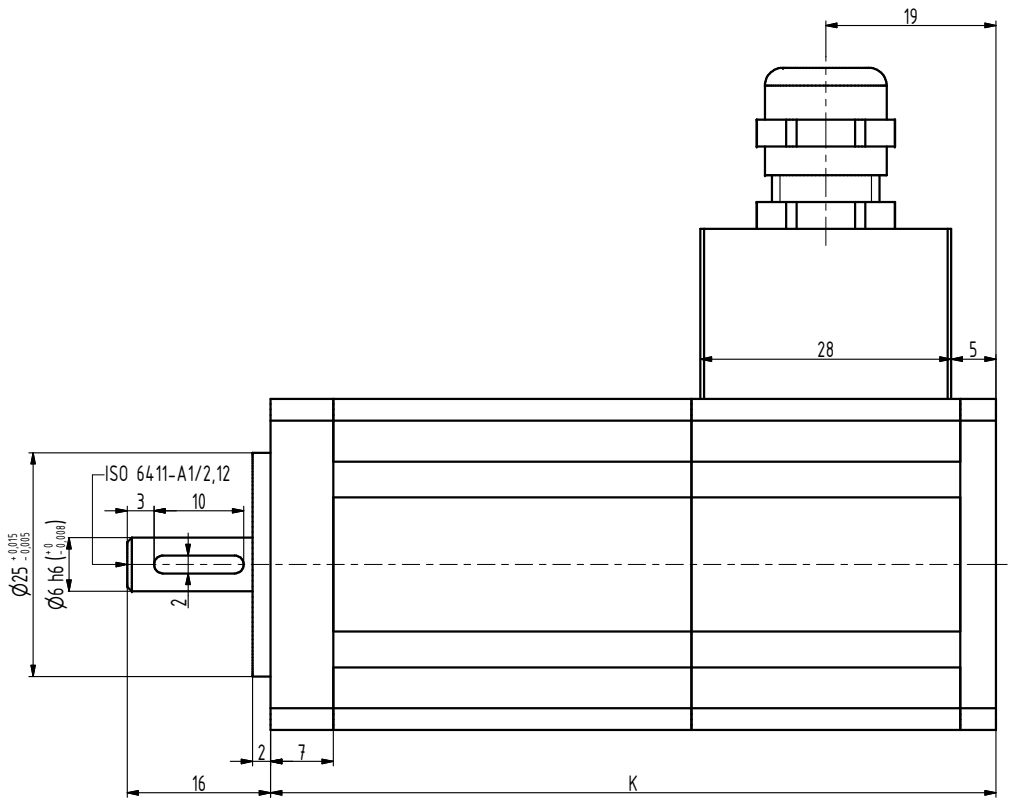

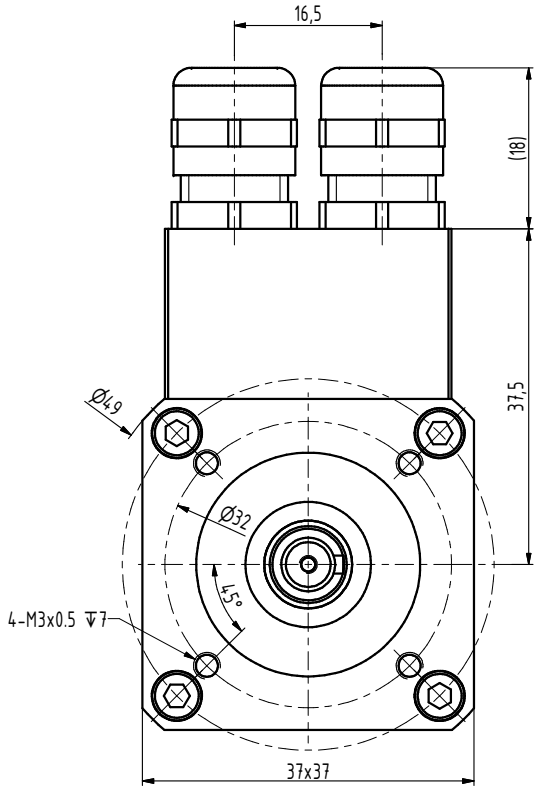

TYP	K
S1-0010	81
S1-0020	96
S1-0030	111

INDEX	ZMĚNA	DATUM	PODPIS		
ZN.MAT.			T.O.	HMOTNOST kg	MĚŘ.
ROZM.-POLOT.					
POM. ZAŘ.				ČSN	TŘ.Č.
VYPR. Šimík		NORM.REF.		POZN.	Č. KUSOVNÍKU
PŘEKR.					
TECHNOL.		SCHVÁLIL Ošlejšek	11.04.2016	STARÝ V.	Č.V.
NÁZEV	Motor S1			S1000 00 P Z	
				Listů	List