Engineering data (WIN 1138)		
DC bus voltage	560	V DC
Nominal AC voltage	330	V AC (rms)
Rated voltage	280	V AC (rms)
Rated power	3.0	kW
Rated speed	300	rpm
Rated torque	94.00	Nm
Rated current	7.21	A (rms)
Peak torque	321	Nm
Peak current	28.4	A (rms)
Stall torque	107	Nm
Stall current	7.9	A (rms)
No load speed	400	rpm
EMF constant ±10%	816	V AC (rms) / 1000rpm
Theoretical torque constant ±10%	13.5	Nm / A (rms)
Torque constant ±10% @ rated load	13.0	Nm / A (rms)
Number of poles	38	
Electrical time constant	4.81	ms
Winding terminal resistance	3.37	Ω
Rotary field terminal inductance	16.2	mH

Customs info	
HS Code	85015220

Mechanical data (setting 29)		
Max mechanical speed	12000	rpm
Mech. time constant	0.96	ms
Thermal time constant	33	min
Rotor inertia	300	kgcm²
Protection	IP64	
Color	RAL 9005	
Cooling	Convection	

Sensors	
Temperature	KTY 83-110 {KTY 83-110 Reissmann}
Feedback	ERM2410 (EnDat 2.2), single-turn, 19 660 800 imp.ot

Torque / speed curve

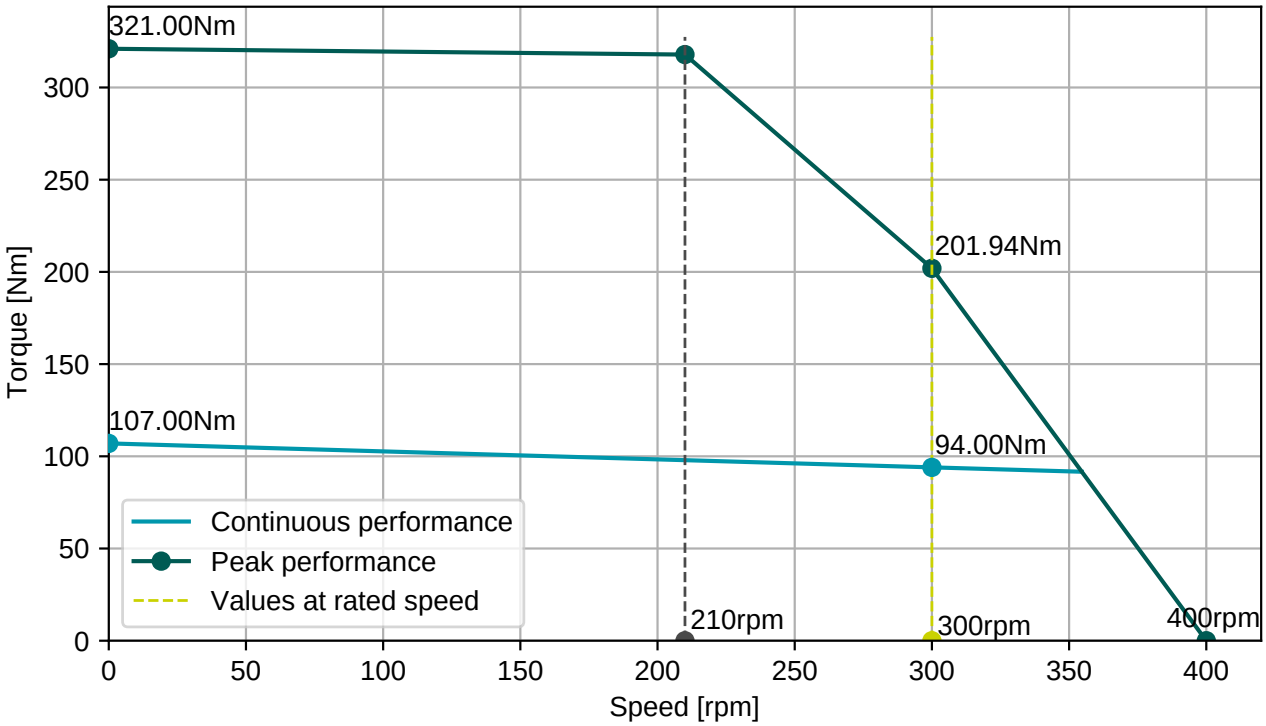

BGC110N00001216000
M23, 8 poles, rotary

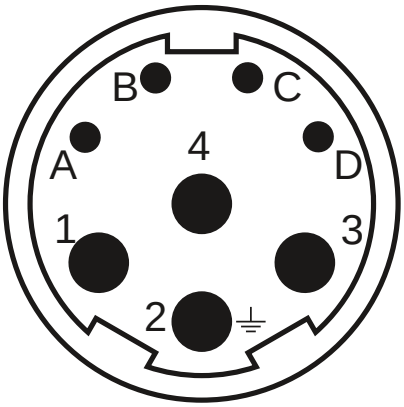

EGA201N00000800000
M15, 9 poles, rotary

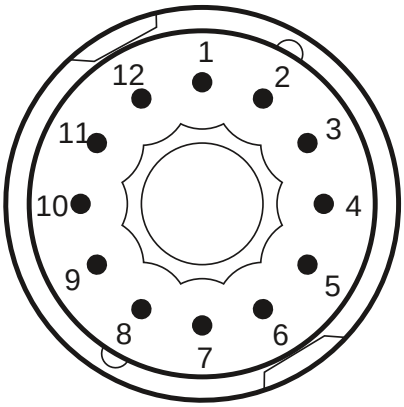

Connector 1 (1)	
1	U
4	V
3	W
2	PE
A	Therm+
B	Therm-
C	Brake+
D	Brake-

Connector 2 (343)	
1	Vcc
2	DATA
3	DATA-
4	CLOCK
5	CLOCK-
6	GNDbatt (Optional for EBI)
7	GND
12	Vbatt (Optional for EBI)

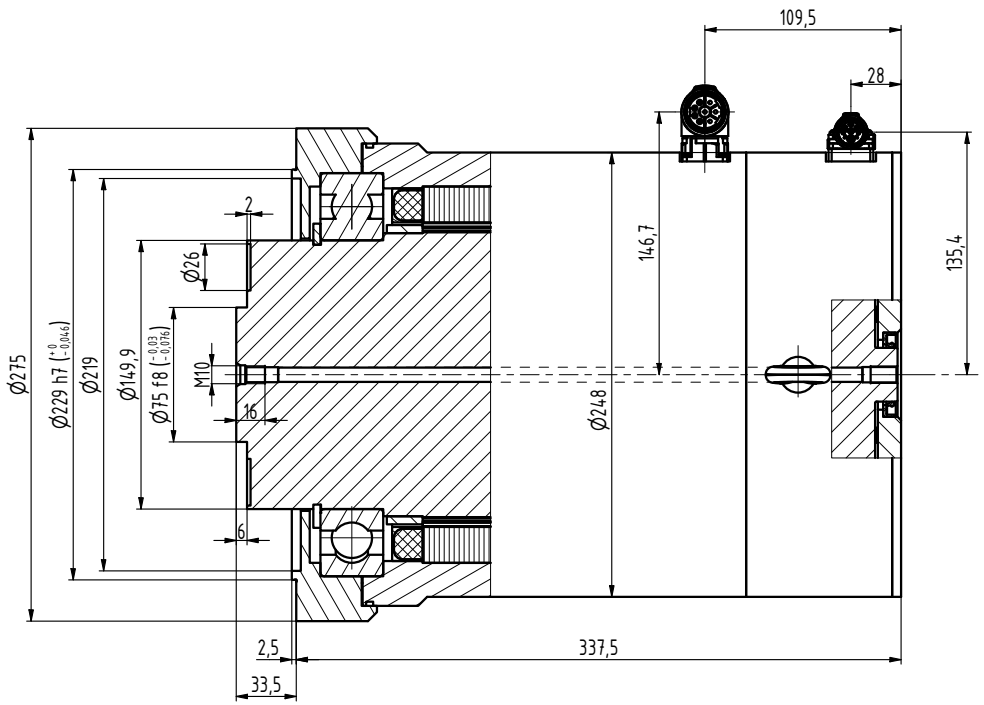

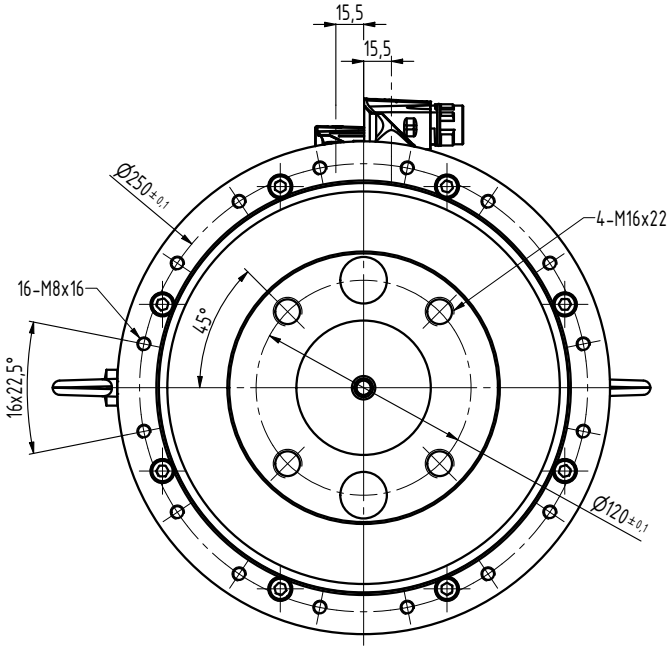

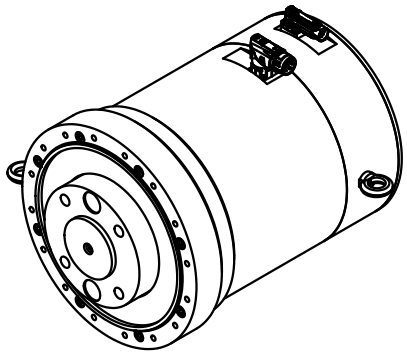

INDEX	ZMĚNA	DATUM	PODPIS		
ZN.MAT.		T.O.	HMOTNOST kg	MĚŘ.	
ROZM.-POLOT.					
POM. ZAŘ.			ČSN	TŘ.Č.	
VYPR.	NORM.REF.		POZN.	Č. KUSOVNÍKU	
PŘEKR.					
TECHNOL.	SCHVÁLIL Ošlejšek	25.2.2016	STARÝ V.	Č.V.	
NÁZEV: Motor Q5-1070			Q5002 00 Z		
			Listů	List	