Engineering data (WIN 694)		
DC bus voltage	560	V DC
Nominal AC voltage	380	V AC (rms)
Rated voltage	273	V AC (rms)
Rated power	1.8	kW
Rated speed	4500	rpm
Rated torque	3.90	Nm
Rated current	5.49	A (rms)
Peak torque	15.3	Nm
Peak current	24.7	A (rms)
Stall torque	5.1	Nm
Stall current	5.4	A (rms)
No load speed	6630	rpm
EMF constant ±10%	57	V AC (rms) / 1000rpm
Theoretical torque constant ±10%	0.94	Nm / A (rms)
Torque constant ±10% @ rated load	0.71	Nm / A (rms)
Number of poles	10	
Electrical time constant	5.47	ms
Winding terminal resistance	1.92	Ω
Rotary field terminal inductance	10.5	mH

Customs info	
HS Code	85015220

Mechanical data (setting 29)		
Max mechanical speed	9000	rpm
Mech. time constant	0.76	ms
Thermal time constant	25	min
Rotor inertia	2.04	kgcm²
Protection	IP64	
Color	RAL 9005	
Cooling	Convection	
Motor-only mass	4.7	kg
Max. axial force 20kh	99	N
Max. radial force 20kh*	520	N
Max. axial force 100kh	58	N
Max. radial force 100kh*	304	N

** Defined for point of action at ½ output shaft length*

Sensors	
Temperature	PT1000 {PT1000}
Feedback	ECI1118 (EnDat 2.1), single-turn, 16 imp. ot. 1 Vpp, 18 bits

Torque / speed curve

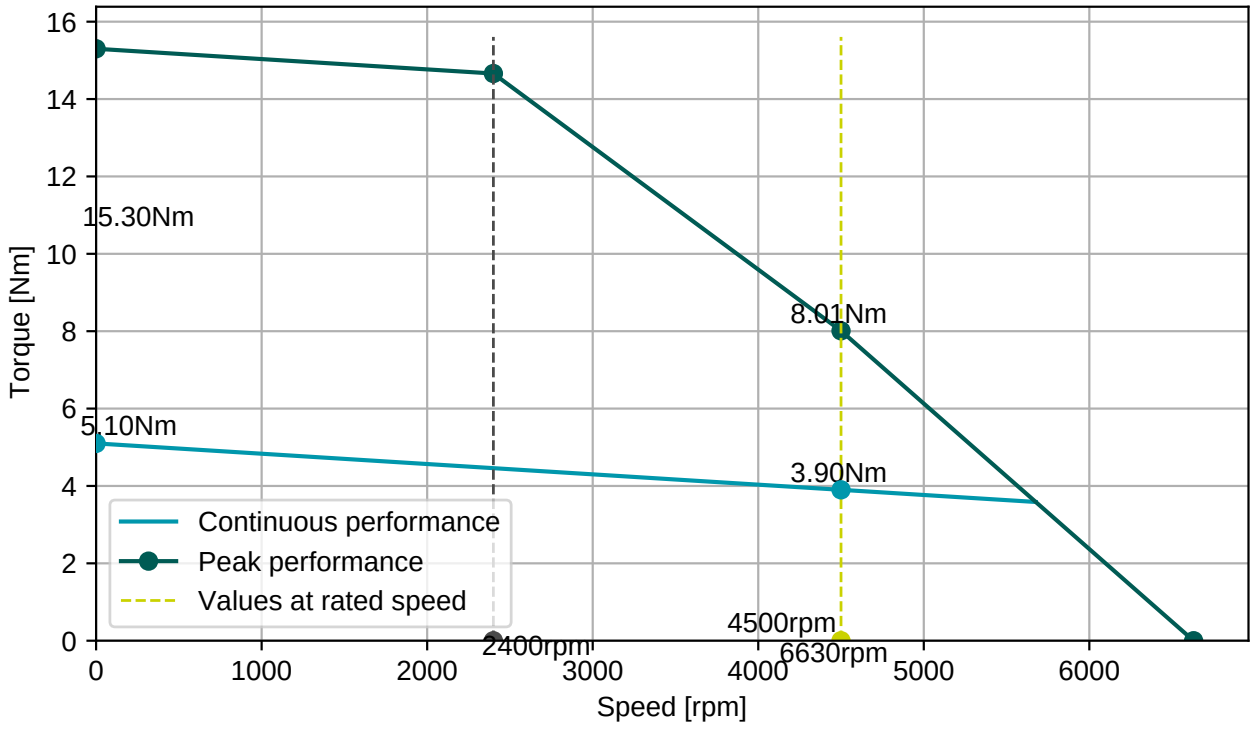

BGC110N00001216000
M23, 8 poles, rotary

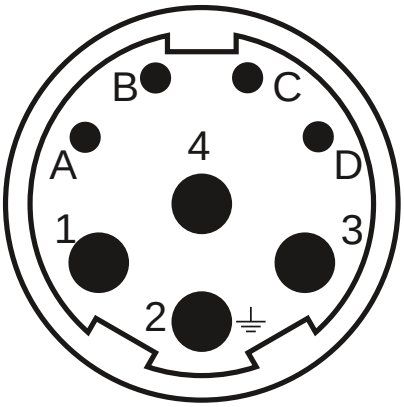

AGC113N00001215000
M23, 17 poles, rotary

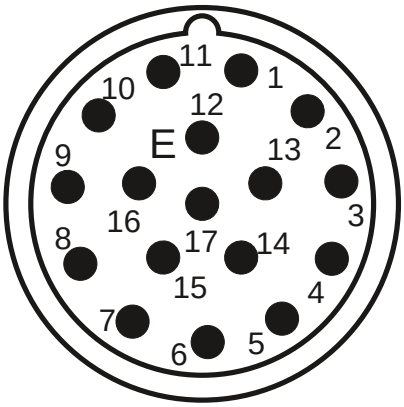

Connector 1 (1)	
1	U
4	V
3	W
2	PE
A	Therm+
B	Therm-
C	Brake+
D	Brake-

Connector 2 (150)	
1	Vcc sensor
4	GND sensor
7	Vcc (+5V)
8	CLOCK
9	CLOCK-
10	GND
12	B+
13	B-
14	DATA
15	A+
16	A-
17	DATA-

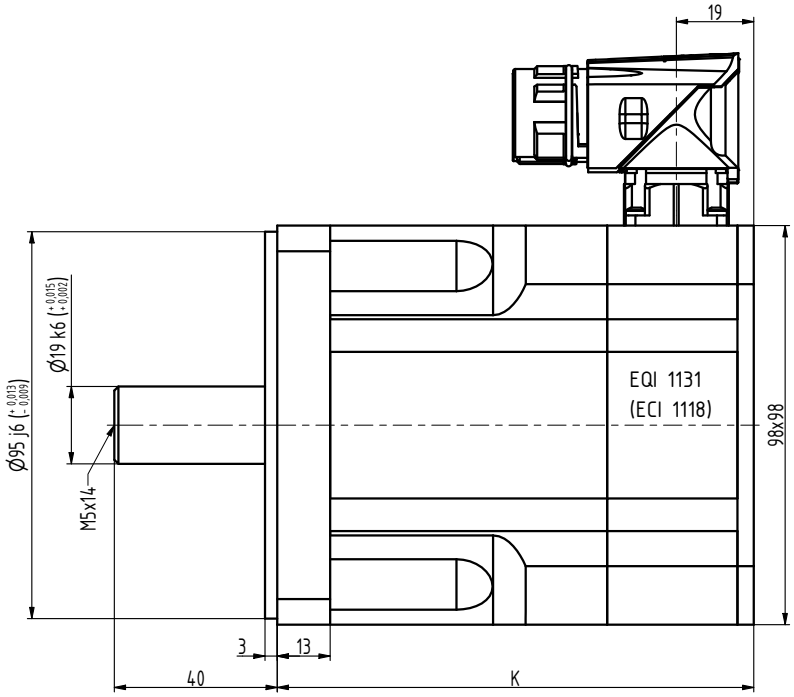

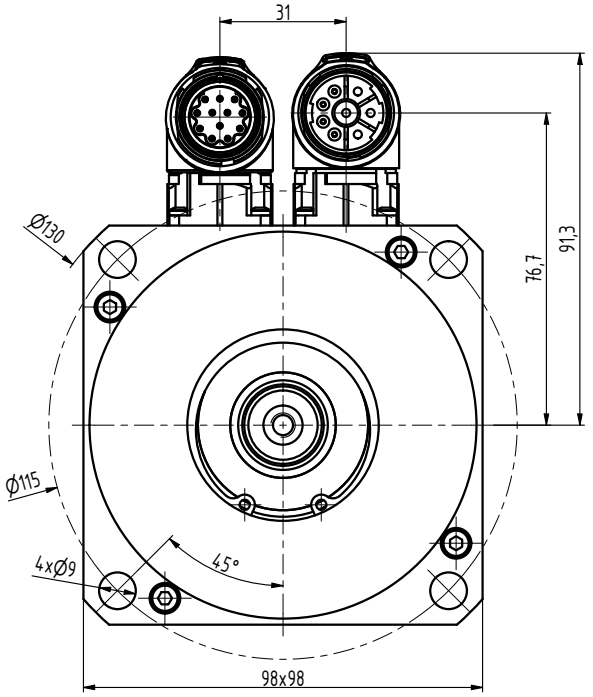

TYP	K
N4-0340	102
N4-0510	117
N4-0750	147
N4-0960	177
N4-1130	207

INDEX	ZMĚNA	DATUM	PODPIS

ZN.MAT.		T.O.	HMOTNOST kg	MĚŘ.
ROZM.-POLOT.				
POM. ZAŘ.			ČSN	TŘ.Č.
VYPR. Ošlejšek	NORM.REF.		POZN.	Č. KUSOVNÍKU
PŘEKR.				
TECHNOL.	SCHVÁLIL Ošlejšek	26.05.2023	STARÝ V.	Č.V.

NÁZEV
Motor N4

N4163 01 Z_S4_S1

Listů List