Engineering data (WIN 739)		
DC bus voltage	320	V DC
Nominal AC voltage	220	V AC (rms)
Rated voltage	193	V AC (rms)
Rated power	942	W
Rated speed	3000	rpm
Rated torque	3.00	Nm
Rated current	3.47	A (rms)
Peak torque	10.5	Nm
Peak current	12.3	A (rms)
Stall torque	3.5	Nm
Stall current	3.41	A (rms)
No load speed	3540	rpm
EMF constant ±10%	62	V AC (rms) / 1000rpm
Theoretical torque constant ±10%	1.03	Nm / A (rms)
Torque constant ±10% @ rated load	0.86	Nm / A (rms)
Number of poles	10	
Electrical time constant	2.86	ms
Winding terminal resistance	4.27	Ω
Rotary field terminal inductance	12.2	mH

Customs info	
HS Code	85015220

Mechanical data (setting 5)		
Max mechanical speed	12000	rpm
Mech. time constant	0.73	ms
Thermal time constant	27	min
Rotor inertia	1.04	kgcm²
Protection	IP64	
Color	RAL 9005	
Cooling	Convection	
Motor-only mass	2.9	kg

Sensors	
Temperature	PT1000 {PT1000}
Feedback	2-pole resolver (ER5Kd411, TS2620N21E11, RE-15-1-A15)

Torque / speed curve

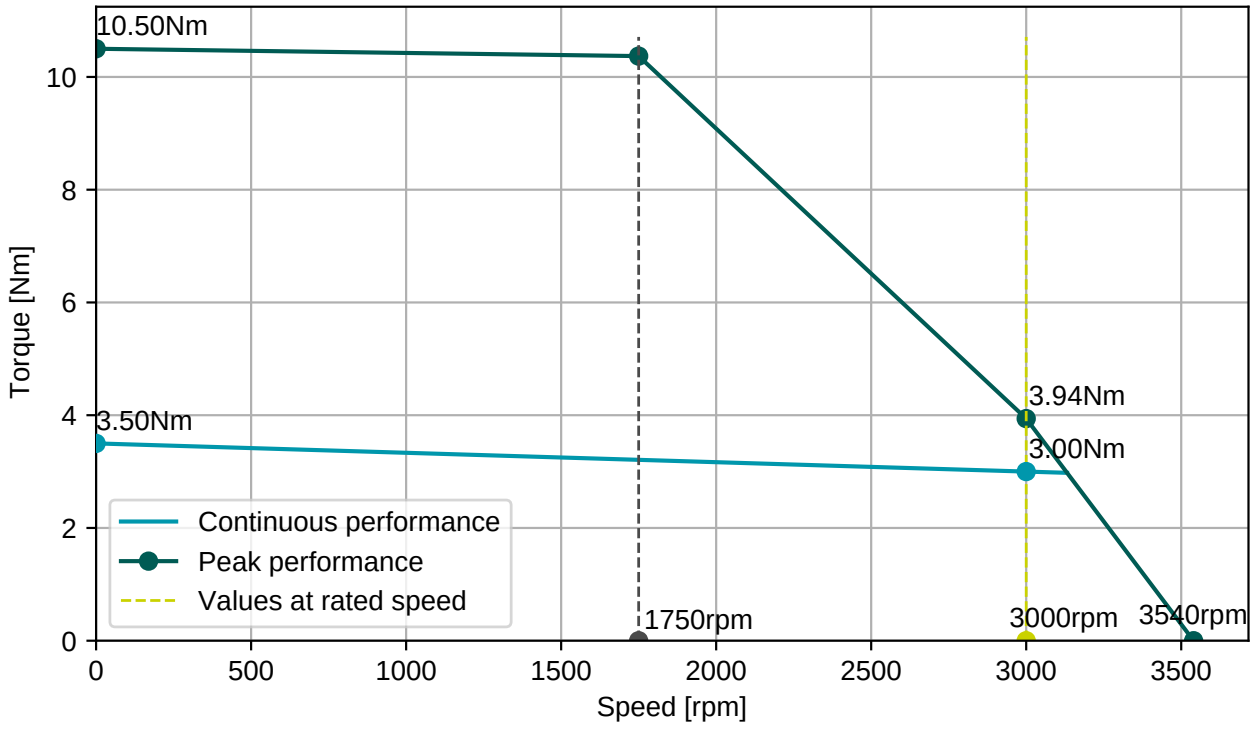

BGC110N00001216000
M23, 8 poles, rotary

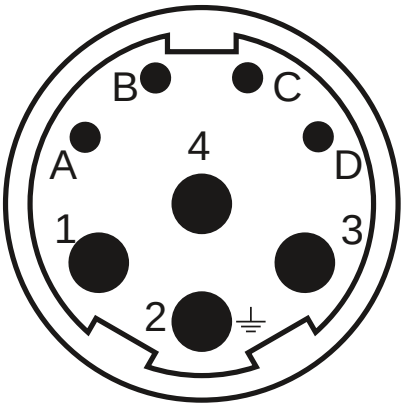

AGC052N00001215000
M23, 12 poles, rotary

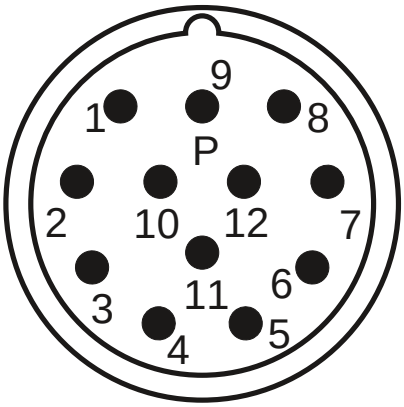

Connector 1 (9)	
1	U
4	V
3	W
2	PE
A	Brake+
B	Brake-
C	
D	

Connector 2 (10)	
2	Therm+
3	S4
4	S3
5	R2
6	Therm-
7	S2
8	S1
9	R1

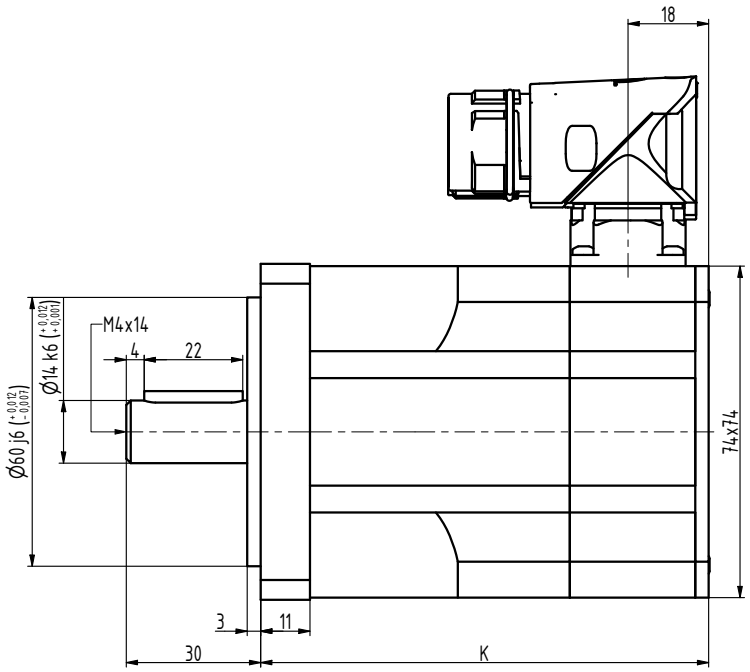

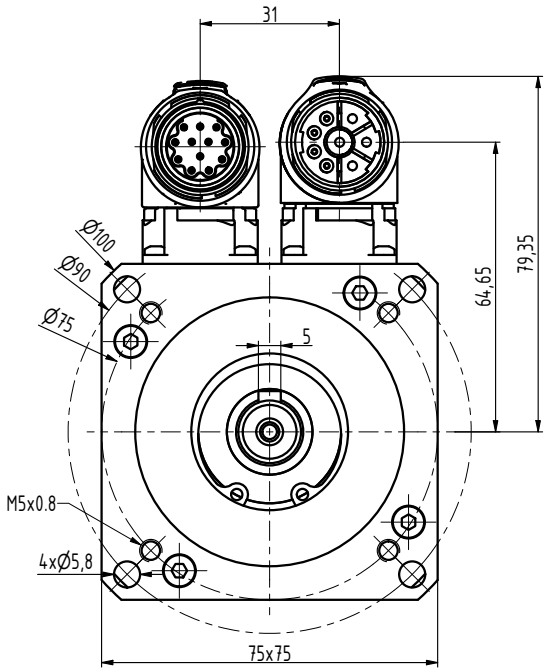

TYP	K
N3-0115	82
N3-0205	100
N3-0280	118
N3-0350	136
N3-0420	154
N3-0480	172

INDEX	ZMĚNA	DATUM	PODPIS

ZN.MAT.		T.O.	HMOTNOST kg	MĚŘ.
ROZM.-POLOT.				
POM. ZAŘ.			ČSN	TŘ.Č.
VYPR. Šimík	NORM.REF.		POZN.	Č. KUSOVNÍKU
PŘEKR. Šimík 19.2.2018				
TECHNOL.	SCHVÁLIL Ošlejšek	22.01.2013	STARÝ V.	Č.V.

NÁZEV
Motor N3

N3111 01 P Z

Listů List