Engineering motordata (WIN 782)		
DC bus voltage	320	V DC
Nominal AC voltage	220	V AC (rms)
Rated voltage	173	V AC (rms)
Rated power	1.3	kW
Rated speed	4500	rpm
Rated torque	2.75	Nm
Rated current	5.25	A (rms)
Peak torque	10.5	Nm
Peak current	18.9	A (rms)
Stall torque	3.5	Nm
Stall current	5.2	A (rms)
No load speed	5420	rpm
EMF constant ±10%	40.5	V AC (rms) / 1000rpm
Theoretical torque constant ±10%	0.67	Nm / A (rms)
Torque constant ±10% @ rated load	0.52	Nm / A (rms)
Number of poles	10	
Electrical time constant	2.89	ms
Winding terminal resistance	1.8	Ω
Rotary field terminal inductance	5.2	mH

Customs info	
HS Code	85015220

Mechanical motor data (setting 48)		
Max mechanical speed	12000	rpm
Mech. time constant	0.72	ms
Thermal time constant	27	min
Rotor inertia	1.04	kgcm²
Protection	IP64	
Color	RAL 9005	
Cooling	Convection	
Motor-only mass	2	kg
Max. axial force 20kh	59	N
Max. radial force 20kh*	311	N
Max. axial force 100kh	35	N
Max. radial force 100kh*	182	N

** Defined for point of action at ½ output shaft length*

Sensors	
Temperature	PT1000 {PT1000}
Feedback	EKM36 (HDSL) multi-turn, 17 + 12 bits

Gearbox engineering data		
Gear ratio	64	
Efficiency*	89	%
Torsional stiffness	49.5	Nm/arcmin
Number of stages	2	
Rated output torque	102	Nm
Cycling output torque	120	Nm
Max output torque	192	Nm
Emergency output torque	380	Nm
Rated input speed	3500	rpm
Max input speed	6500	rpm
Operating temperature	<-25; 90>	°C
Max. backlash	< 9	arcmin
Service life	20000	h

** at rated speed & torque*

Lubrication	
Type	Standard
Lubricant	Castrol Optigear Synthetic 800/150

Gearbox mechanical data		
Radial force for 20'000h	2400	N
Radial force for 30'000h	2100	N
Max. radial force	3800	N
Axial force for 20'000h	3300	N
Axial force for 30'000h	3300	N
Max. axial force	5200	N
Tilting moment for 20'000h	475	Nm
Tilting moment for 30'000h	422	Nm
Max. bending moment	38	Nm
Output shaft design	Flange with dowel hole	
Mass	8.33	kg
Input inertia	1.416	kgcm²
Protection	IP54	

Actuator data		
Rated speed	55	rpm
Rated torque	102.00	Nm
Cycling torque	120.00	Nm
Peak torque	192.00	Nm
Emergency stop torque	380.00	Nm
EMF constant ±10%	2592.0	V AC (rms) / 1000rpm
Torque constant ±10% @ rated load	29.84	Nm / A (rms)
Total mass	10.33	kg
Output inertia	10059.8	kgcm²

Torque / speed curve

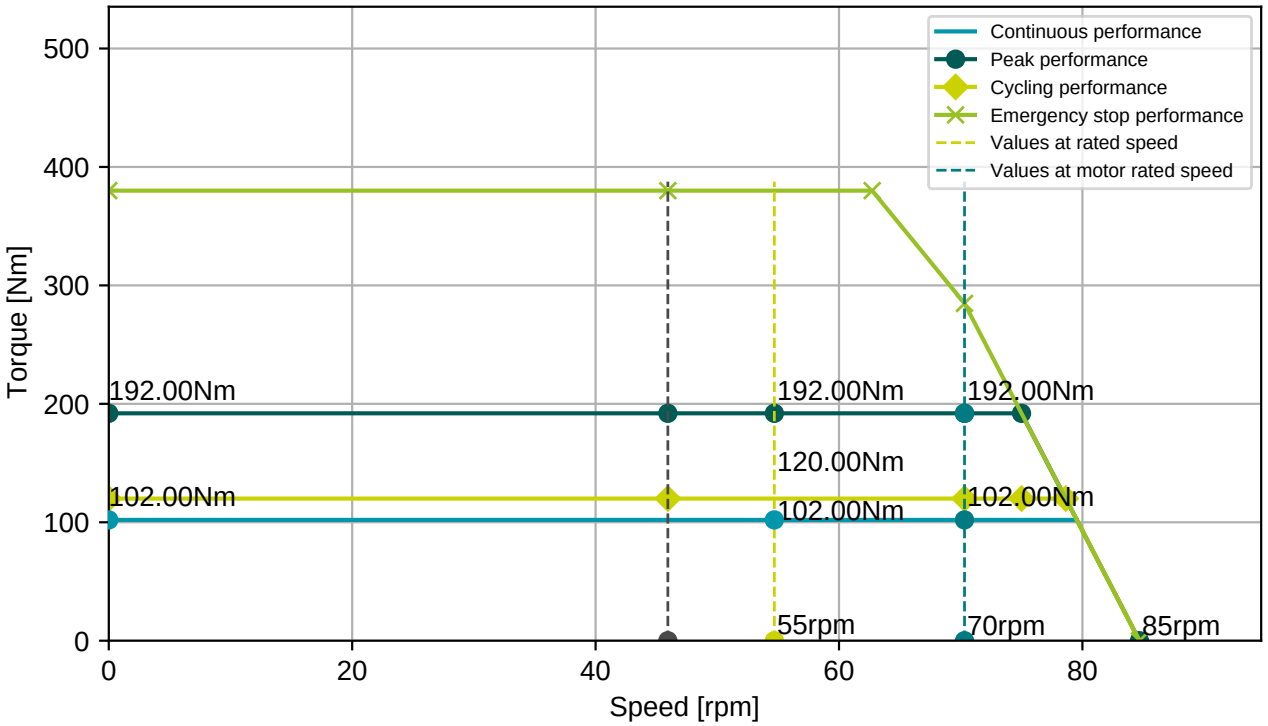

BGC110N00001216000

M23, 8 poles, rotary

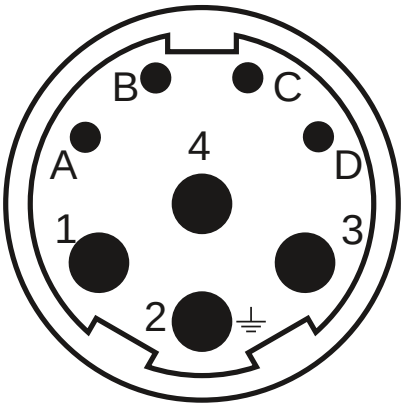

Connector 1 (283)	
1	U
4	V
3	W
2	PE
A	Brake+
B	Brake-
C	GND/DSL-
D	+Us/DSL+

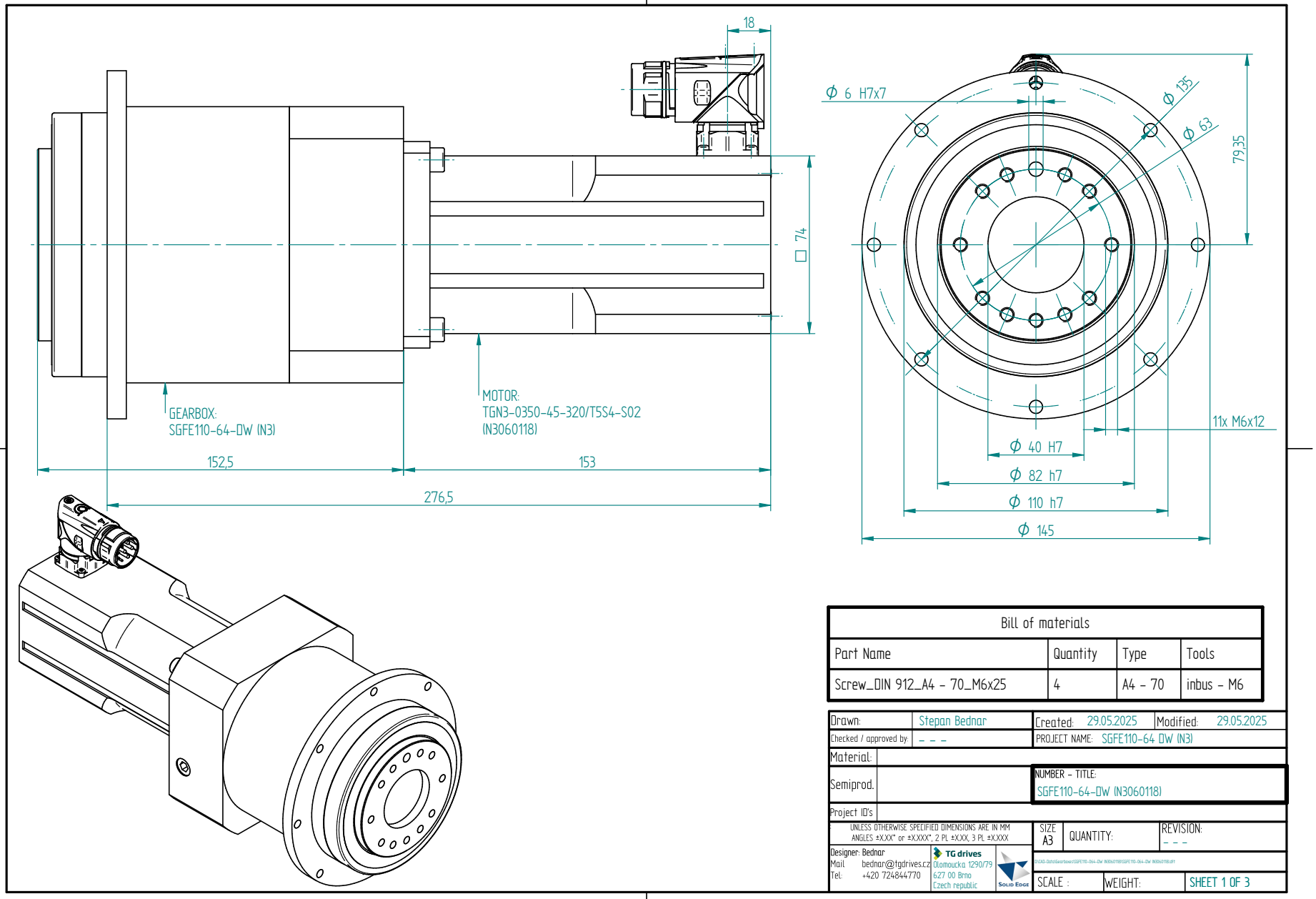

Bill of materials			
Part Name	Quantity	Type	Tools
Screw_DIN 912_A4 - 70_M6x25	4	A4 - 70	inbus - M6

Drawn:	Stepan Bednar	Created: 29.05.2025	Modified: 29.05.2025
Checked / approved by:	- - -	PROJECT NAME: SGFE110-64 DW (N3)	
Material:			
Semiprod.		NUMBER - TITLE: SGFE110-64-DW (N3060118)	
Project ID's			

UNLESS OTHERWISE SPECIFIED DIMENSIONS ARE IN MM
ANGLES ±X,XX° or ±X,XXX", 2 PL ±X,XX, 3 PL ±X,XXX

SIZE A3 | QUANTITY: | REVISION: - - -

Designer: Bednar
Mail bednar@tgdrives.cz
Tel: +420 724844770

TG drives
Olomoucka 1290/79
627 00 Brno
Czech republic

SCALE : | WEIGHT: | SHEET 1 OF 3

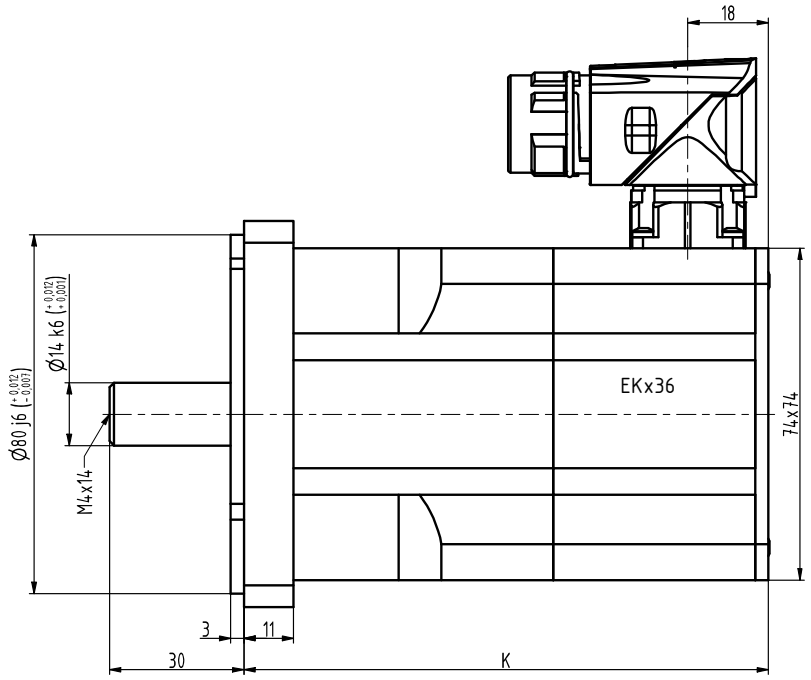

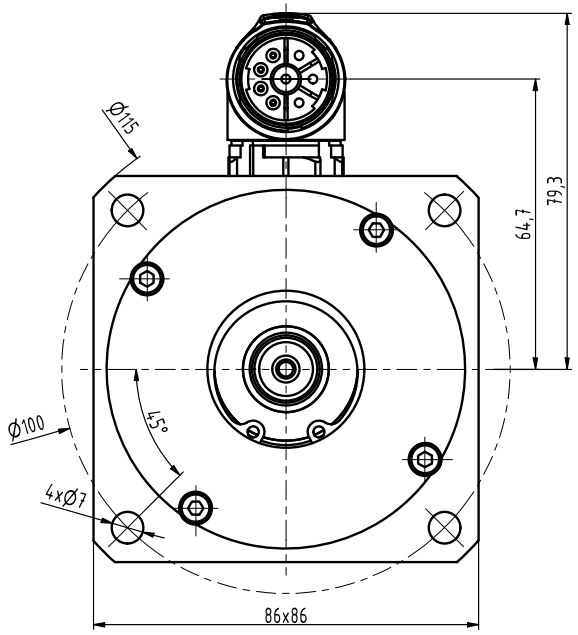

TYP	K
N3-0115	99
N3-0205	117
N3-0280	135
N3-0350	153
N3-0420	171
N3-0480	189

INDEX	ZMĚNA	DATUM	PODPIS

ZN.MAT.			T.O.	HMOTNOST kg	MĚŘ.
ROZM.-POLOT.					
POM. ZAŘ.				ČSN	TŘ.Č.
VYPR. Ošlejšek	NORM.REF.			POZN.	Č. KUSOVNÍKU
PŘEKR. Ošlejšek 30.05.20201					
TECHNOL.	SCHVÁLIL Ošlejšek	27.10.2017		STARÝ V.	Č.V.

NÁZEV
Motor N3

N3119 06 Z_S4_S1

Listů List

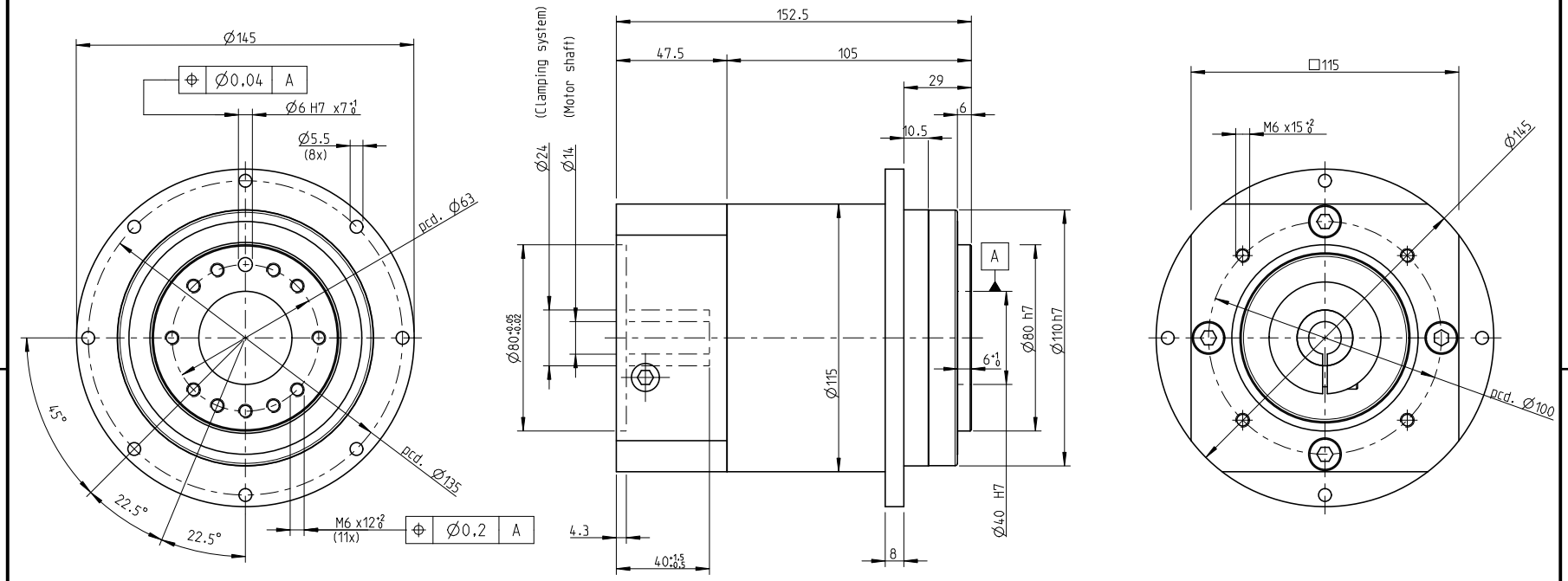

INDEX	ZMĚNA	DATUM	PODPIS		
ZM.MAT.		T.O.		HMOTNOST kg	MĚŘ.
ROZM.-POLOT.					
ROZM. ZAŘ.				ČSN	TŘ.Č.
VYPR.	NORM. REF.			POZN.	Č. KUSOVNÍKU
PŘEKR.					
TECHNOL.	SCHVÁLIL.	12.9.2020		STARÝ V.	Č.V.

NÁZEV

Gearbox SGFE110

TGN3, TGH3, TGT3

Listů List