Engineering motordata (WIN 782)		
DC bus voltage	320	V DC
Nominal AC voltage	220	V AC (rms)
Rated voltage	173	V AC (rms)
Rated power	1.3	kW
Rated speed	4500	rpm
Rated torque	2.75	Nm
Rated current	5.25	A (rms)
Peak torque	10.5	Nm
Peak current	18.9	A (rms)
Stall torque	3.5	Nm
Stall current	5.2	A (rms)
No load speed	5420	rpm
EMF constant ±10%	40.5	V AC (rms) / 1000rpm
Theoretical torque constant ±10%	0.67	Nm / A (rms)
Torque constant ±10% @ rated load	0.52	Nm / A (rms)
Number of poles	10	
Electrical time constant	2.89	ms
Winding terminal resistance	1.8	Ω
Rotary field terminal inductance	5.2	mH

Customs info	
HS Code	85015220

Mechanical motor data (setting 48)		
Max mechanical speed	12000	rpm
Mech. time constant	0.72	ms
Thermal time constant	27	min
Rotor inertia	1.04	kgcm²
Protection	IP64	
Color	RAL 9005	
Cooling	Convection	
Motor-only mass	2	kg
Max. axial force 20kh	59	N
Max. radial force 20kh*	311	N
Max. axial force 100kh	35	N
Max. radial force 100kh*	182	N

** Defined for point of action at ½ output shaft length*

Sensors	
Temperature	PT1000 {PT1000}
Feedback	EKM36 (HDSL) multi-turn, 17 + 12 bits

Gearbox engineering data		
Gear ratio	50	
Efficiency*	94	%
Torsional stiffness	86	Nm/arcmin
Number of stages	2	
Rated output torque	130	Nm
Cycling output torque	260	Nm
Max output torque	415	Nm
Emergency output torque	600	Nm
Rated input speed	4000	rpm
Max input speed	10000	rpm
Operating temperature	<-25; 90>	°C
Max. backlash	< 5	arcmin
Service life	20000	h

** at rated speed & torque*

Gearbox mechanical data		
Radial force for 20'000h	4900	N
Radial force for 30'000h	4350	N
Max. radial force	4900	N
Axial force for 20'000h	9500	N
Axial force for 30'000h	8400	N
Max. axial force	9500	N
Tilting moment for 20'000h	475	Nm
Tilting moment for 30'000h	422	Nm
Max. bending moment	38	Nm
Output shaft design	Flange	
Mass	6.04	kg
Input inertia	0.551	kgcm²
Protection	IP65	

Lubrication	
Type	Standard
Lubricant	Castrol Optigear Synthetic 800/150

Actuator data		
Rated speed	80	rpm
Rated torque	130.00	Nm
Cycling torque	260.00	Nm
Peak torque	415.00	Nm
Emergency stop torque	525.00	Nm
EMF constant ±10%	2025.0	V AC (rms) / 1000rpm
Torque constant ±10% @ rated load	24.62	Nm / A (rms)
Total mass	8.04	kg
Output inertia	3977.5	kgcm²

Torque / speed curve

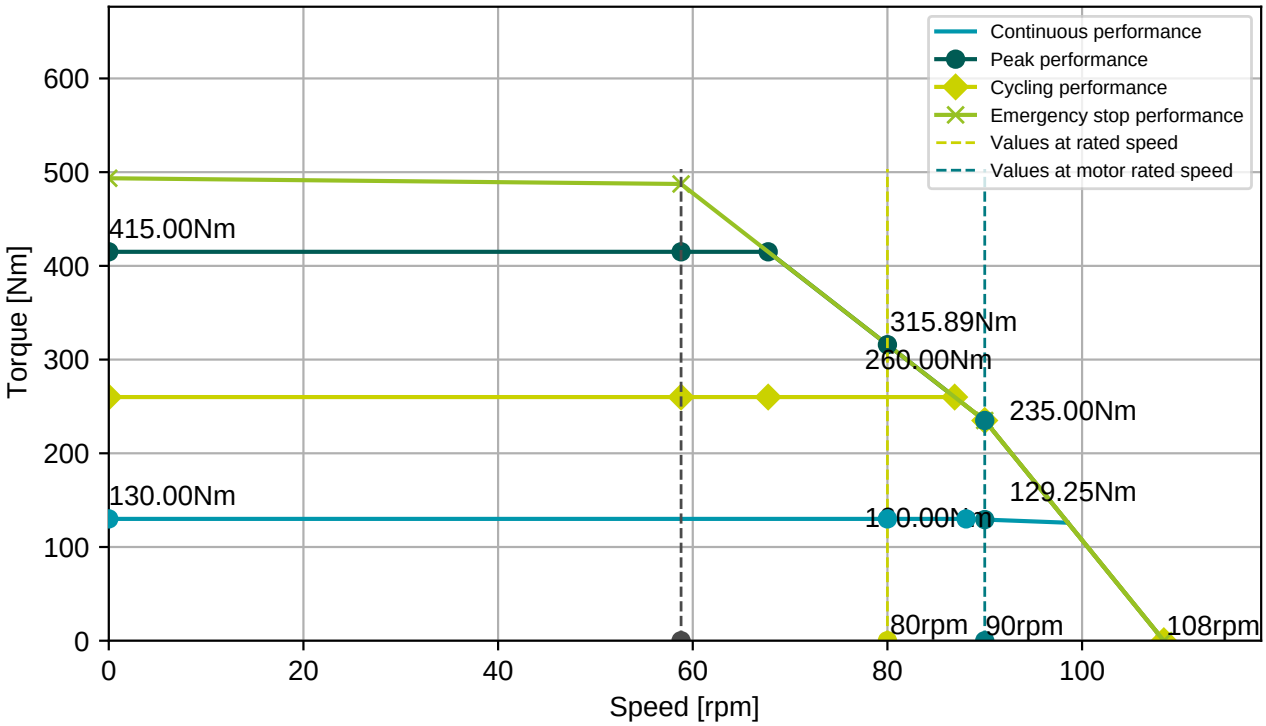

BGC110N00001216000

M23, 8 poles, rotary

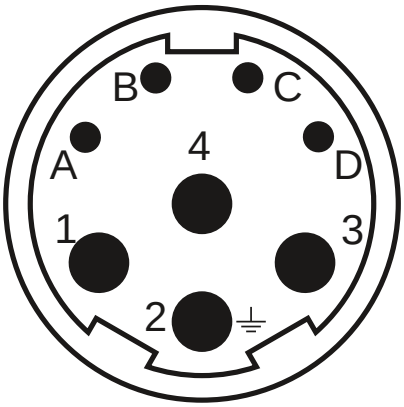

Connector 1 (283)	
1	U
4	V
3	W
2	PE
A	Brake+
B	Brake-
C	GND/DSL-
D	+Us/DSL+

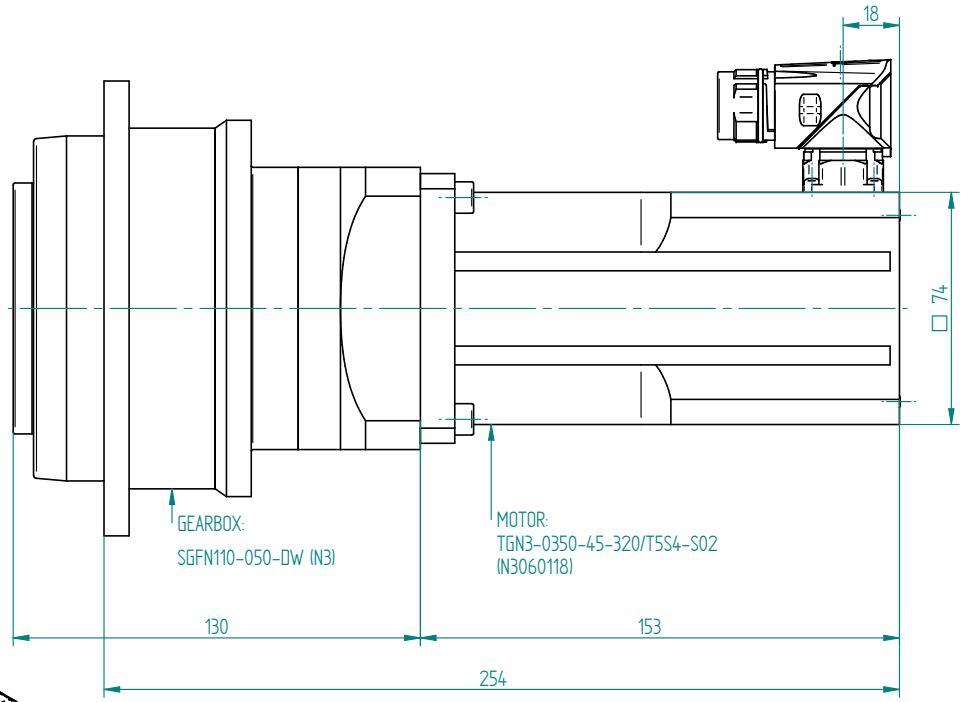

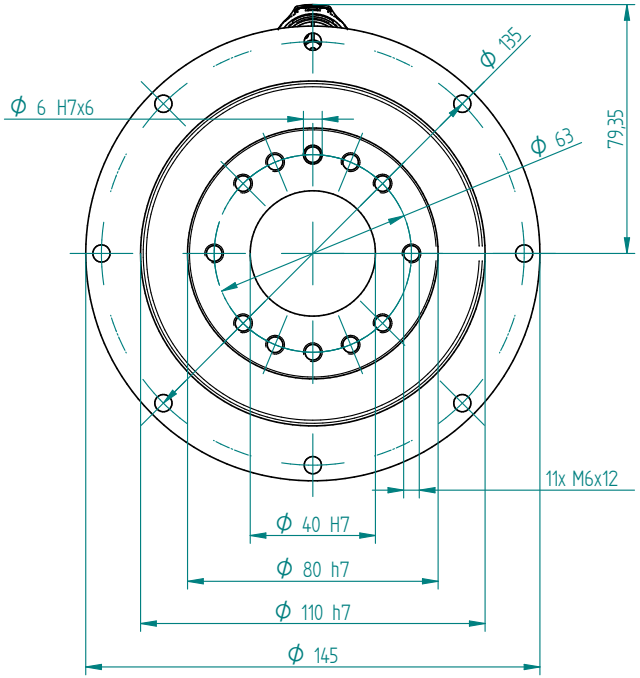

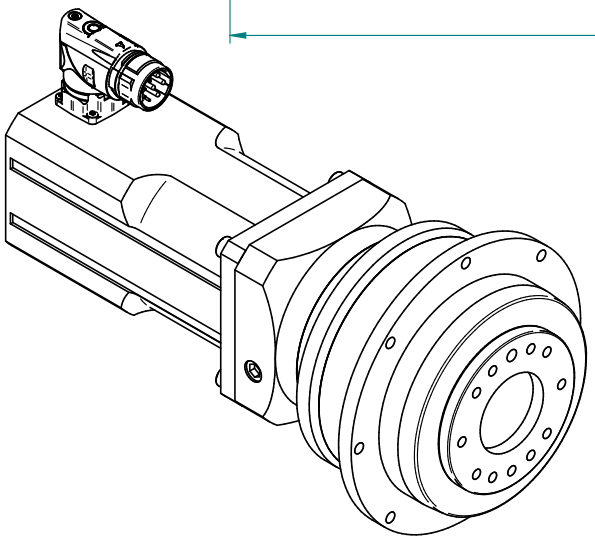

Bill of materials			
Part Name	Quantity	Type	Tools
Screw_DIN 912_A4 - 70_M6x25	4	A4 - 70	inbus - M6

Drawn:	Stepan Bednar	Created: 29.05.2025	Modified: 29.05.2025
Checked / approved by:	- - -	PROJECT NAME: Gearbox SGFN110-50-DW (N3)	
Material:			
Semiprod.		NUMBER - TITLE: SFGN110-050-DW (N3060118)	
Project ID's			

UNLESS OTHERWISE SPECIFIED DIMENSIONS ARE IN MM
ANGLES ±X.XX° or ±X.XXX", 2 PL ±X.XX, 3 PL ±X.XXX

SIZE A3 | QUANTITY: | REVISION: - - -

Designer: Bednar
Mail: bednar@tgdrives.cz
Tel: +420 724844770

TG drives
Olomoucka 1290/79
627 00 Brno
Czech republic

SCALE : | WEIGHT: | SHEET 1 OF 3

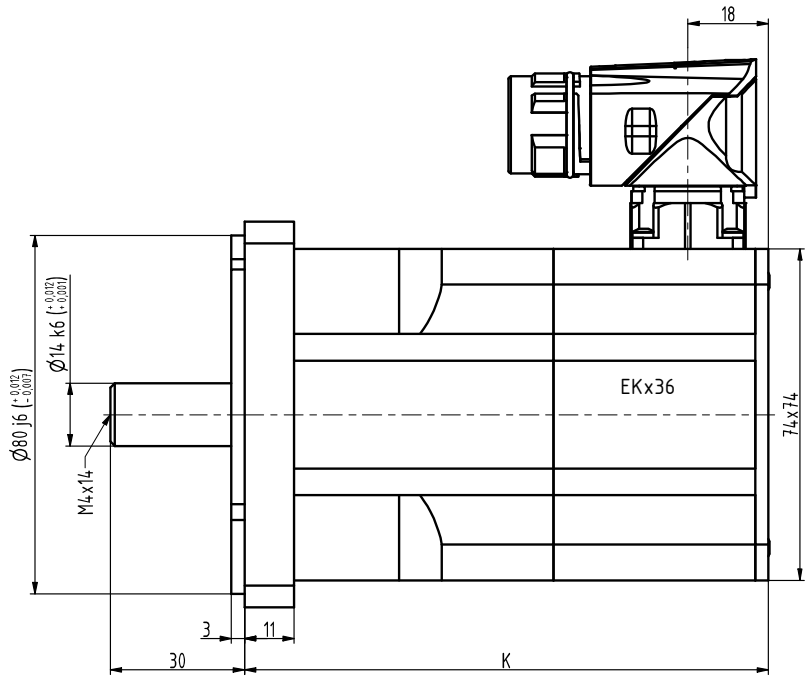

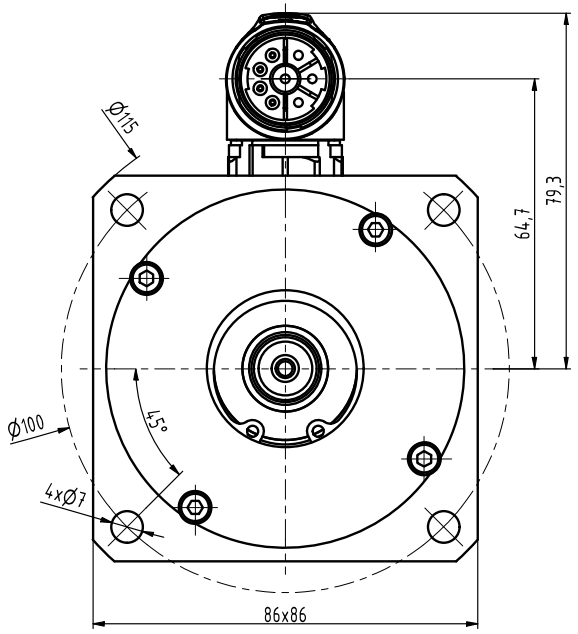

TYP	K
N3-0115	99
N3-0205	117
N3-0280	135
N3-0350	153
N3-0420	171
N3-0480	189

INDEX	ZMĚNA	DATUM	PODPIS

ZN.MAT.		T.O.	HMOTNOST kg	MĚŘ.	
ROZM.-POLOT.					
POM. ZAŘ.			ČSN	TŘ.Č.	
VYPR. Ošlejšek	NORM.REF.		POZN.	Č. KUSOVNÍKU	
PŘEKR. Ošlejšek 30.05.20201					
TECHNOL.	SCHVÁLIL Ošlejšek	27.10.2017	STARÝ V.	Č.V.	

NÁZEV
Motor N3

N3119 06 Z_S4_S1

Listů List

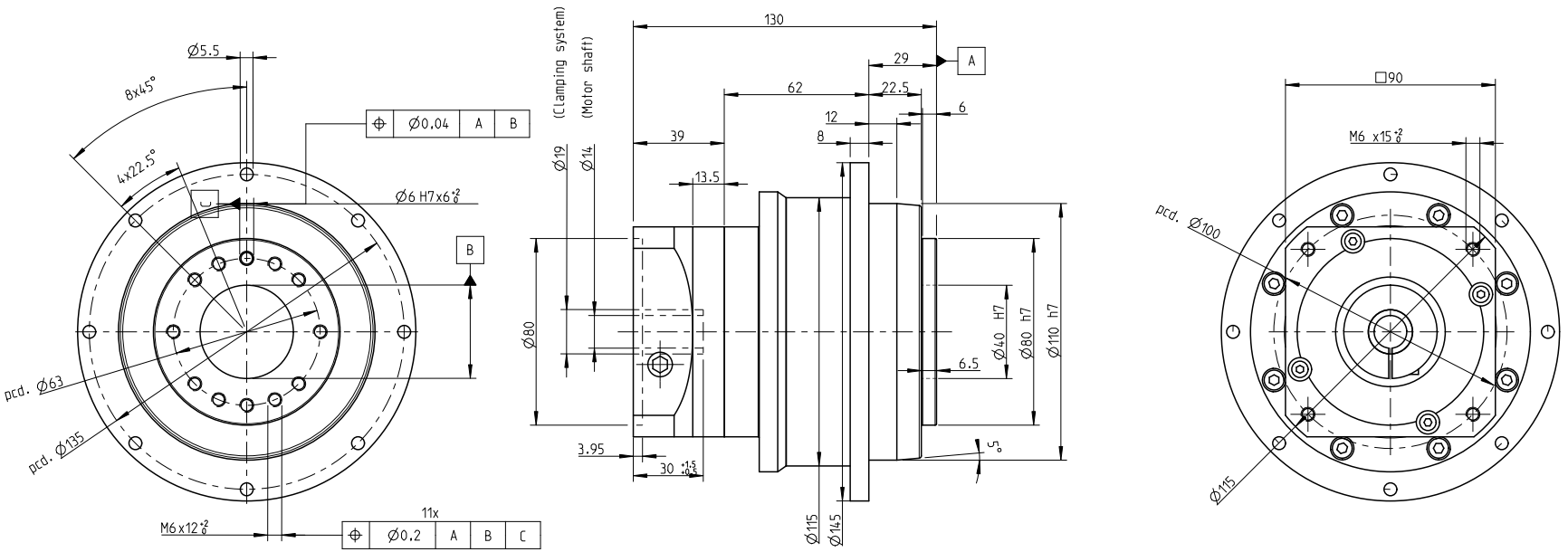

INDEX	ZMĚNA	DATUM	PODPIS	
ZM.MAT.		T.O.	HMOTNOST kg	MĚŘ.
ROZM.-POLOT.				
ROZM. ZAŘ.			ČSN	TŘ.Č.
VYPR.	NORM. REF.		POZN.	Č. KUSOVNÍKU
PŘEKR.				
TECHNOL.	SCHVÁLIL.	12.9.2020	STARÝ V.	Č.V.
NÁZEV				
Gearbox SGFN110			TGN3, TGH3, TGT3	
			Listů	List