Engineering data (WIN 40)		
DC bus voltage	320	V DC
Nominal AC voltage	200	V AC (rms)
Rated voltage	147	V AC (rms)
Rated power	4.5	kW
Rated speed	3000	rpm
Rated torque	14.30	Nm
Rated current	22.38	A (rms)
Peak torque	51	Nm
Peak current	104.7	A (rms)
Stall torque	18.7	Nm
Stall current	27.9	A (rms)
No load speed	4930	rpm
EMF constant ±10%	42	V AC (rms) / 1000rpm
Theoretical torque constant ±10%	0.67	Nm / A (rms)
Torque constant ±10% @ rated load	0.64	Nm / A (rms)
Number of poles	10	
Electrical time constant	19.58	ms
Winding terminal resistance	0.12	Ω
Rotary field terminal inductance	2.35	mH

Customs info	
HS Code	85015220

Mechanical data (setting 5)		
Max mechanical speed	9000	rpm
Mech. time constant	0.47	ms
Thermal time constant	60	min
Rotor inertia	11	kgcm²
Protection	IP65	
Color	RAL 9005	
Cooling	Convection	
Cable length	0.3	m
Motor-only mass	13.5	kg

Sensors	
Temperature	PT1000 {PT1000}
Feedback	2-pole resolver (ER5Kd411, TS2620N21E11, RE-15-1-A15)

Brake		
Braking torque	18.00	Nm
Voltage	24	V DC
Power @20°C	24.0	W
Current @20°C	1.00	A
Inertia	2.00	kgcm²
Mass	1.80	kg

Note

power wires U,V,W - length 300mm
brake, resolver, PT1000 - length 200-250mm

Torque / speed curve

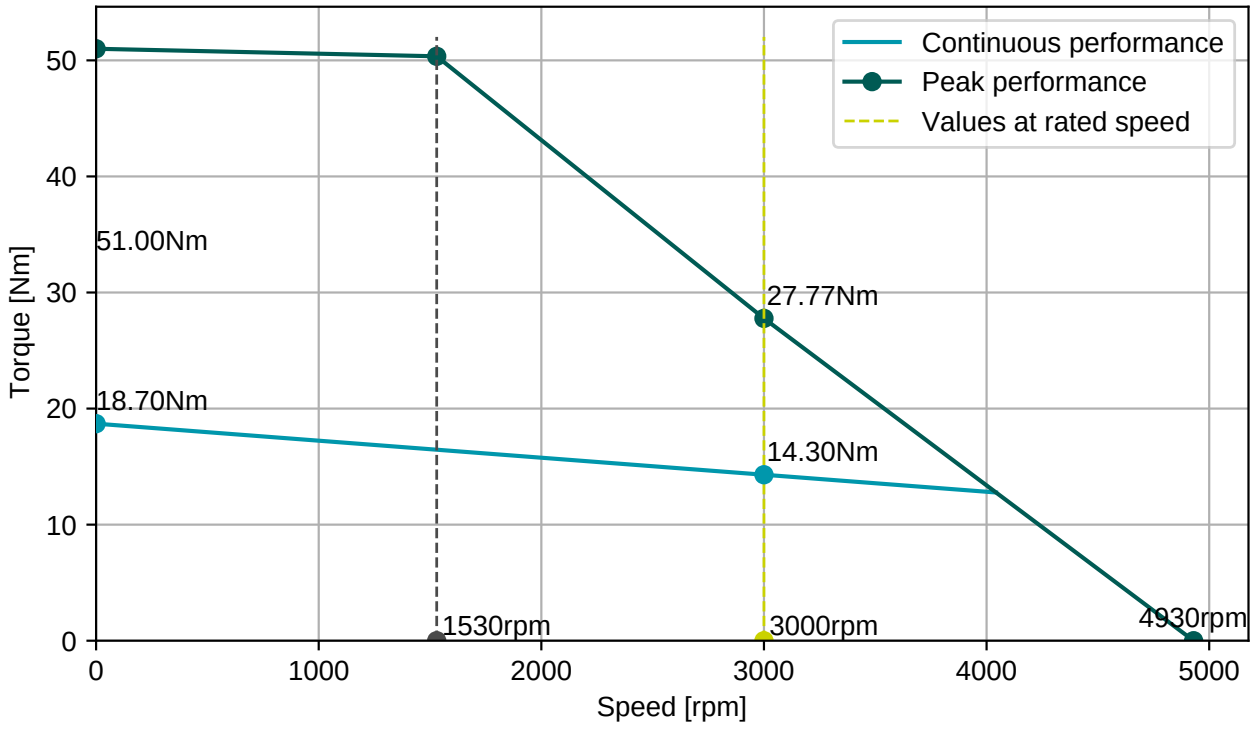

Connector 1 (259)	
white	U
blue	V
red	W

2x Therm
2x Brake

Connector 2 (32)	
red-white	R1
black-white	R2
yellow-white	R2)
red	S1
yellow	S2
black	S3
blue	S4

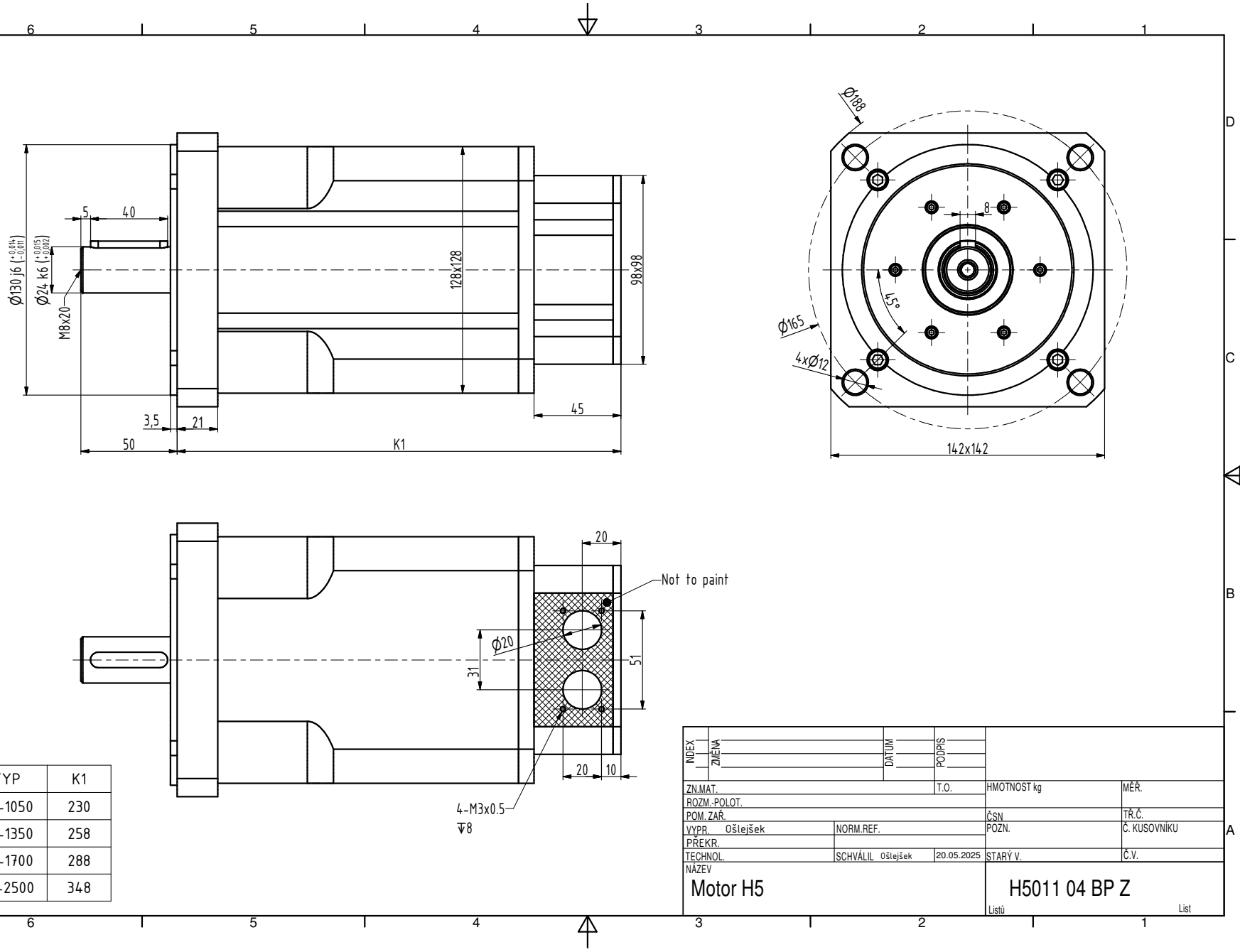

TYP	K1
H5-1050	230
H5-1350	258
H5-1700	288
H5-2500	348

INDEX	ZMĚNA	DATUM	PODPIS

ZN.MAT.		T.O.	HMOTNOST kg	MĚŘ.
ROZM.-POLOT.				
POM. ZAŘ.			ČSN	TŘ.Č.
VYPR. Ošlejšek	NORM.REF.		POZN.	Č. KUSOVNÍKU
PŘEKR.				
TECHNOL.	SCHVÁLIL Ošlejšek	20.05.2025	STARÝ V.	Č.V.

NÁZEV

Motor H5

H5011 04 BP Z

Listů List