Engineering data (WIN 72)		
DC bus voltage	320	V DC
Nominal AC voltage	200	V AC (rms)
Rated voltage	165	V AC (rms)
Rated power	333	W
Rated speed	6000	rpm
Rated torque	0.53	Nm
Rated current	1.43	A (rms)
Peak torque	2.4	Nm
Peak current	6.6	A (rms)
Stall torque	0.6	Nm
Stall current	1.54	A (rms)
No load speed	8510	rpm
EMF constant ±10%	23.5	V AC (rms) / 1000rpm
Theoretical torque constant ±10%	0.39	Nm / A (rms)
Torque constant ±10% @ rated load	0.37	Nm / A (rms)
Number of poles	6	
Electrical time constant	0.92	ms
Winding terminal resistance	12.39	Ω
Rotary field terminal inductance	11.4	mH

Customs info	
HS Code	85015100

Mechanical data (setting 5)		
Max mechanical speed	12000	rpm
Mech. time constant	1.56	ms
Thermal time constant	20	min
Rotor inertia	0.11	kgcm²
Protection	IP65	
Color	RAL 9005	
Cooling	Convection	
Cable length	0.3	m
Motor-only mass	1.2	kg

Sensors	
Temperature	PT1000 {PT1000}
Feedback	2-pole resolver (ER5Kd411, TS2620N21E11, RE-15-1-A15)

Brake		
Braking torque	2.00	Nm
Voltage	24	V DC
Power @20°C	11.0	W
Current @20°C	0.46	A
Inertia	0.08	kgcm²
Mass	0.20	kg

Note

power wires U,V,W - length 300mm
brake, resolver, PT1000 - length 200-250mm

Torque / speed curve

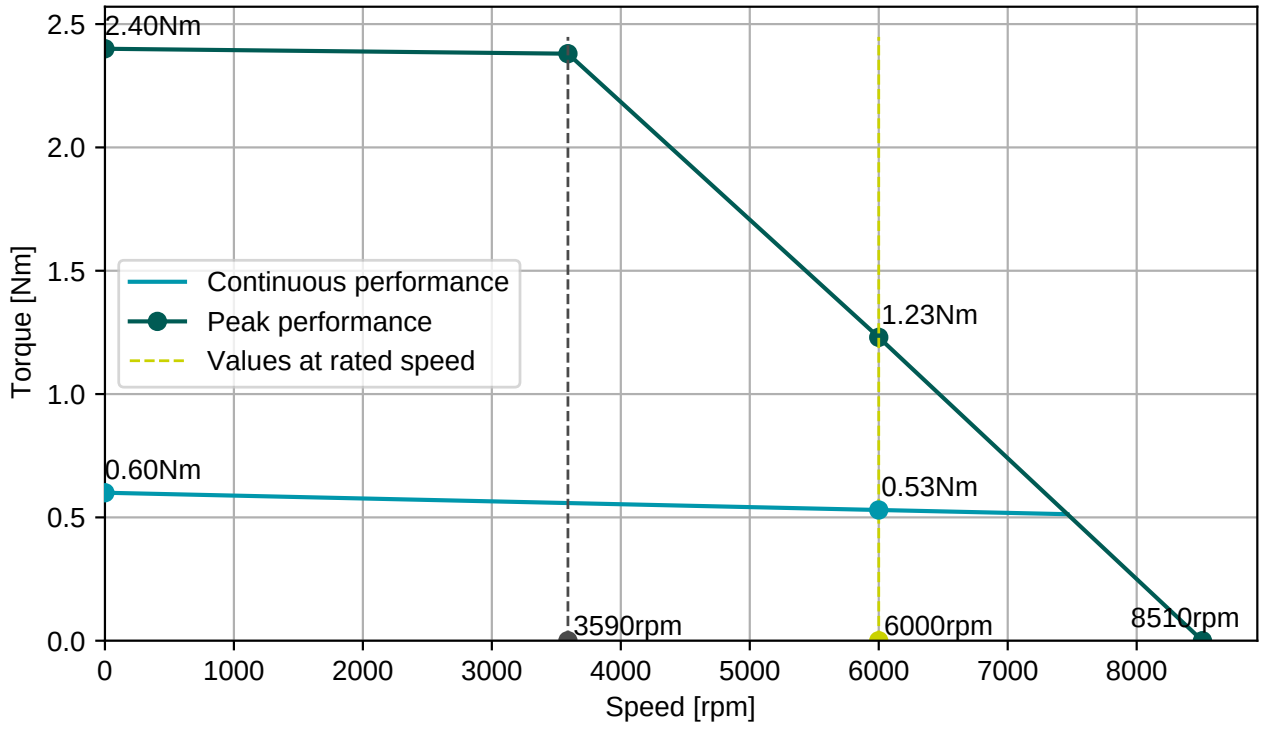

Connector 1 (259)	
white	U
blue	V
red	W

2x Therm
2x Brake

Connector 2 (32)	
red-white	R1
black-white	R2
yellow-white	R2)
red	S1
yellow	S2
black	S3
blue	S4

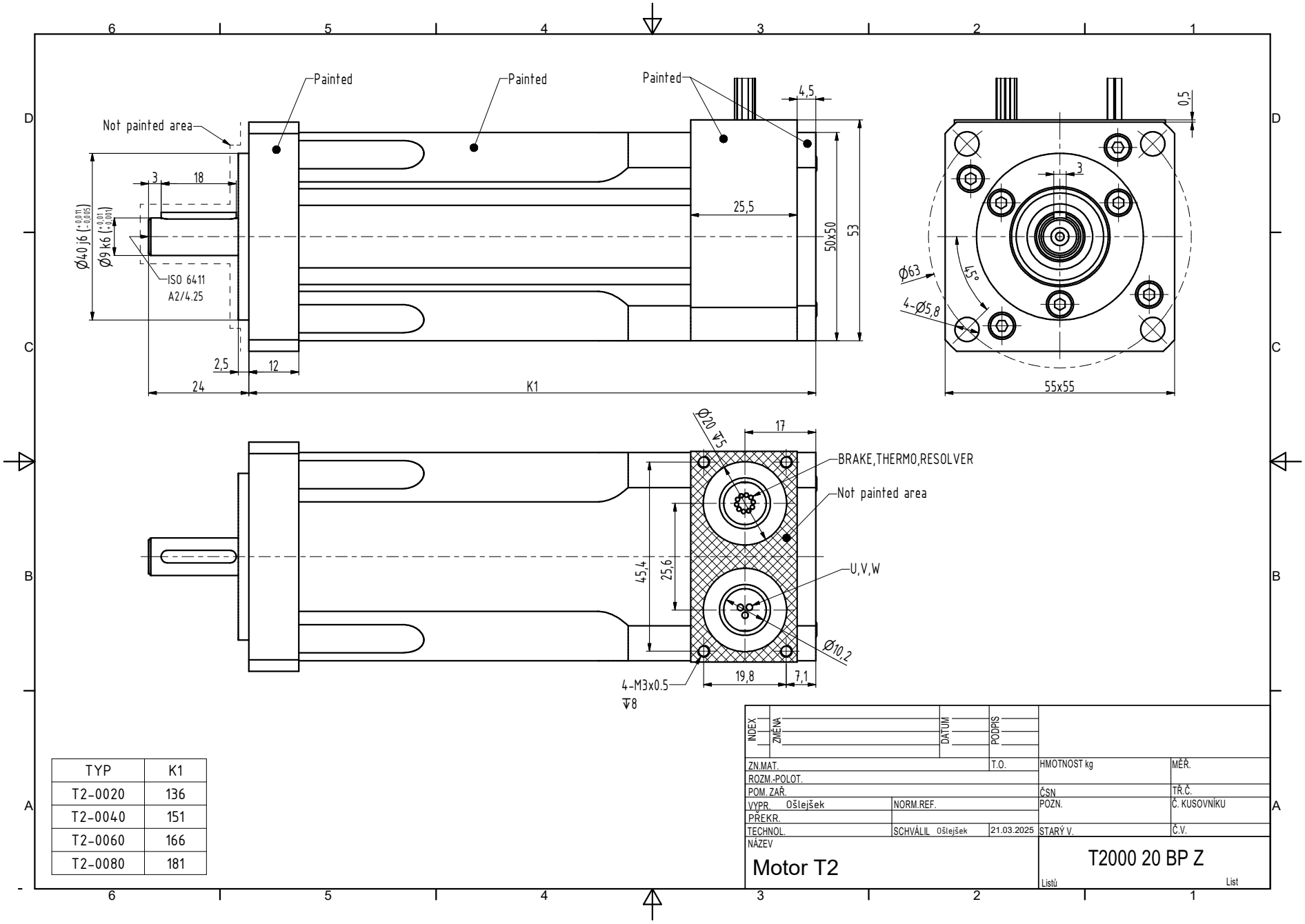

TYP	K1
T2-0020	136
T2-0040	151
T2-0060	166
T2-0080	181

INDEX	ZMĚNA	DATUM	PODPIS

ZN.MAT.		T.O.	HMOTNOST kg	MĚŘ.
ROZM.-POLOT.				
POM. ZAŘ.			ČSN	TŘ.Č.
VYPR. Ošlejšek	NORM.REF.		POZN.	Č. KUSOVNÍKU
PŘEKR.				
TECHNOL.	SCHVÁLIL Ošlejšek	21.03.2025	STARÝ V.	Č.V.

NÁZEV

Motor T2

T2000 20 BP Z

Listů List