Engineering data (WIN 1346)		
DC bus voltage	48	V DC
Nominal AC voltage	33	V AC (rms)
Rated voltage	22	V AC (rms)
Rated power	1.4	kW
Rated speed	3000	rpm
Rated torque	4.50	Nm
Rated current	44.18	A (rms)
Peak torque	19.5	Nm
Peak current	264.7	A (rms)
Stall torque	6.5	Nm
Stall current	60.6	A (rms)
No load speed	5080	rpm
EMF constant ±10%	6.48	V AC (rms) / 1000rpm
Theoretical torque constant ±10%	0.107	Nm / A (rms)
Torque constant ±10% @ rated load	0.102	Nm / A (rms)
Number of poles	10	
Electrical time constant	5.79	ms
Winding terminal resistance	0.019	Ω
Rotary field terminal inductance	0.11	mH

Customs info	
HS Code	85015220

Mechanical data (setting 48)		
Max mechanical speed	9000	rpm
Mech. time constant	1.35	ms
Thermal time constant	30	min
Rotor inertia	4.7	kgcm²
Protection	IP64	
Color	RAL 9005	
Cooling	Convection	
Motor-only mass	7	kg
Max. axial force 20kh	145	N
Max. radial force 20kh*	761	N
Max. axial force 100kh	85	N
Max. radial force 100kh*	445	N

** Defined for point of action at ½ output shaft length*

Sensors	
Temperature	PT1000 {PT1000}
Feedback	EES37 (HDSL) single-turn, 17 bits

Torque / speed curve

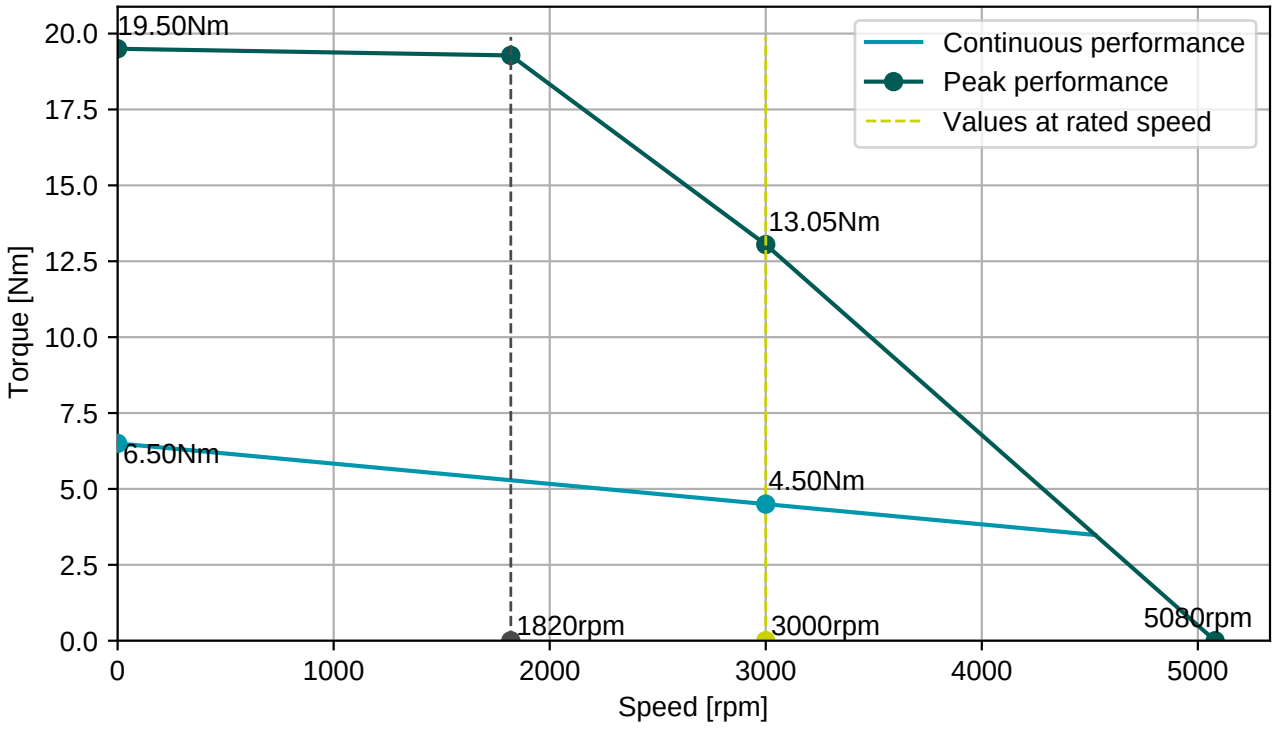

Cable DSL4x6 (2x0,25)+(2x1,5),
D=16,6±0,4mm

Connector 1 (306)	
1	U
2	V
3	W
PE	PE
5	Brake+
6	Brake-
brown	+Us/DSL+
white	GND/DSL-

Numbers printed on the cables

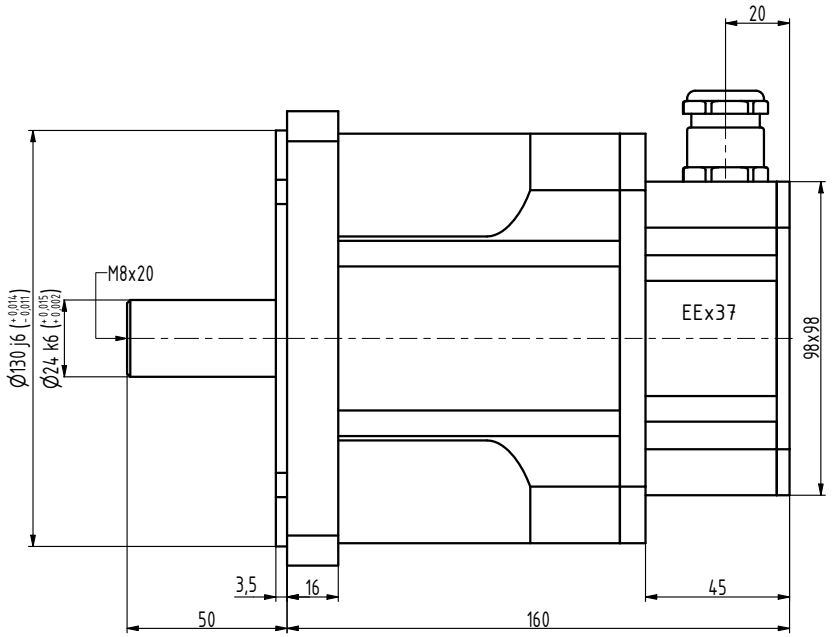

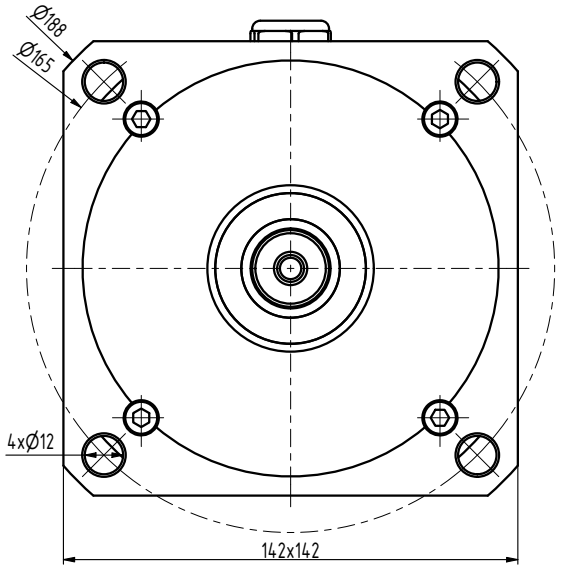

INDEX	ZMĚNA	DATUM	PODPIS		
ZN.MAT.			T.O.	HMOTNOST kg	MĚŘ.
ROZM.-POLOT.					
POM. ZAŘ.				ČSN	TŘ.Č.
VYPR. Šimík		NORM.REF.		POZN.	Č. KUSOVNÍKU
PŘEKR.					
TECHNOL.		SCHVÁLIL Ošlejšek	11.12.2017	STARÝ V.	Č.V.

NÁZEV
Motor N5-0650

N5085 xx Z

Listů List