Engineering data (WIN -100013)		
DC bus voltage	24	V DC
Nominal AC voltage	17	V AC (rms)
Rated voltage	6	V AC (rms)
Rated power	351	W
Rated speed	500	rpm
Rated torque	6.70	Nm
Rated current	55.47	A (rms)
Peak torque	28	Nm
Peak current	263.8	A (rms)
Stall torque	7	Nm
Stall current	55.69	A (rms)
No load speed	2220	rpm
EMF constant ±10%	7.6	V AC (rms) / 1000rpm
Theoretical torque constant ±10%	0.13	Nm / A (rms)
Torque constant ±10% @ rated load	0.12	Nm / A (rms)
Number of poles	16	
Electrical time constant	2.08	ms
Winding terminal resistance	0.024	Ω
Rotary field terminal inductance	0.05	mH

Customs info	
HS Code	85015100

Mechanical data (setting 6)		
Max mechanical speed	9000	rpm
Mech. time constant	0.89	ms
Thermal time constant	40	min
Rotor inertia	3.4	kgcm²
Protection	IP00	
Color	RAL 9005	
Cooling	Convection	
Motor-only mass	2.7	kg

Sensors	
Temperature	PT1000 {PT1000}

Torque / speed curve

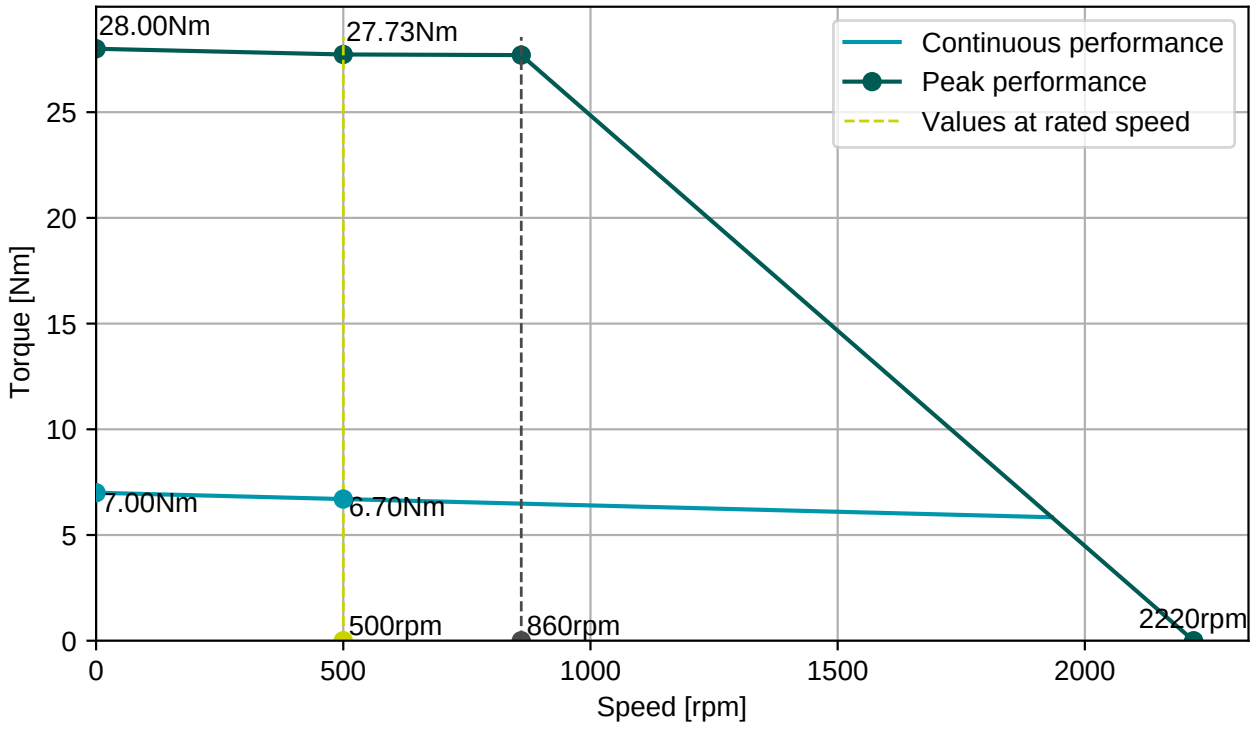

Connector 1 (259)	
white	U
blue	V
red	W

2x Therm
2x Brake

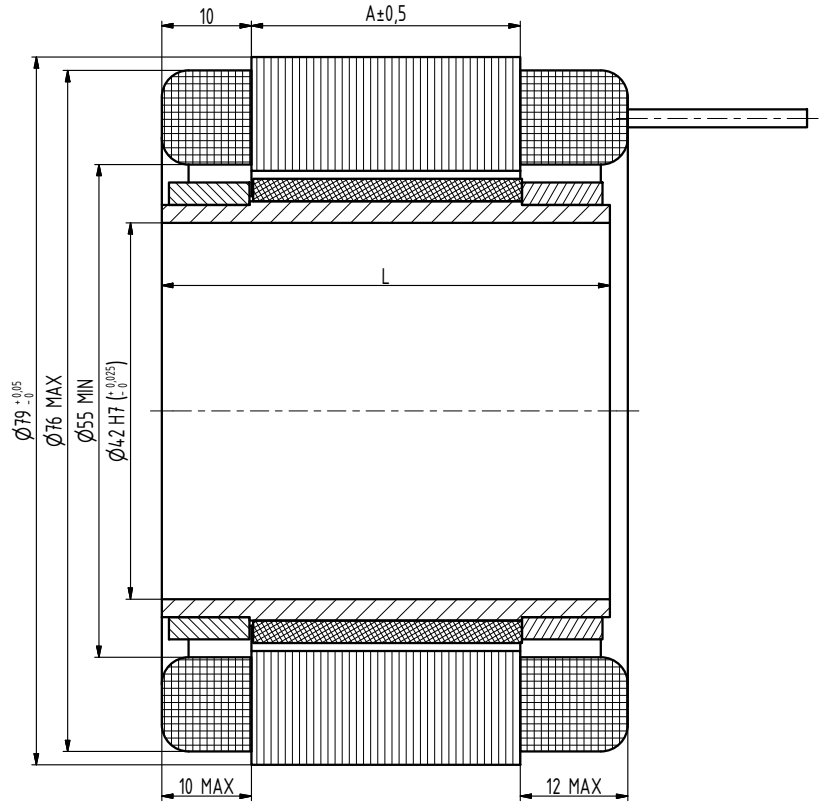

(a)		
TYP	A	L
Q1-0225	30	50
Q1-0375	60	80
Q1-0515	90	110
Q1-0700	120	140
Q1-0850	150	170

INDEX	ZMĚNA	DATUM	PODPIS
a	oprava rozměru pro 0850	7.11.17	RŠ

ZN.MAT.		T.O.	HMOTNOST kg	MĚŘ. 2:1
ROZM.-POLOT.				
POM. ZAŘ.			ČSN	TŘ.Č.
VYPR. Šimík	NORM.REF.		POZN.	Č. KUSOVNÍKU
PŘEZK.				
TECHNOL.	SCHVÁLIL Ošlejšek	19.10.2016	STARÝ V.	Č.V.

NÁZEV
Motor Q1

Q1000 00 Z a

Listů List