Engineering data (WIN 622)		
DC bus voltage	48	V DC
Nominal AC voltage	30	V AC (rms)
Rated voltage	24	V AC (rms)
Rated power	396	W
Rated speed	6000	rpm
Rated torque	0.63	Nm
Rated current	11.77	A (rms)
Peak torque	2.8	Nm
Peak current	54.2	A (rms)
Stall torque	0.74	Nm
Stall current	13.3	A (rms)
No load speed	8890	rpm
EMF constant ±10%	3.4	V AC (rms) / 1000rpm
Theoretical torque constant ±10%	0.06	Nm / A (rms)
Torque constant ±10% @ rated load	0.05	Nm / A (rms)
Number of poles	6	
Electrical time constant	2.11	ms
Winding terminal resistance	0.19	Ω
Rotary field terminal inductance	0.4	mH

Customs info	
HS Code	85015100

Mechanical data (setting 5)		
Max mechanical speed	12000	rpm
Mech. time constant	1.04	ms
Thermal time constant	20	min
Rotor inertia	0.1	kgcm²
Protection	IP65	
Color	RAL 9005	
Cooling	Convection	
Cable length	1	m
Motor-only mass	1.7	kg
Max. axial force 20kh	37	N
Max. radial force 20kh*	195	N
Max. axial force 100kh	22	N
Max. radial force 100kh*	114	N

** Defined for point of action at ½ output shaft length*

Sensors	
Temperature	PTC 111-K13 {PTC 111-K13 Reissmann}
Feedback	6-poles resolver RE-15-3-A14

Note

The winding of the motor has rated current 11.77 A. Power cable is rated only for 10 A. The motor can be operated only with continuous current limited to 10 A in servoamplifier. Otherwise the power cable could be burned.

Torque / speed curve

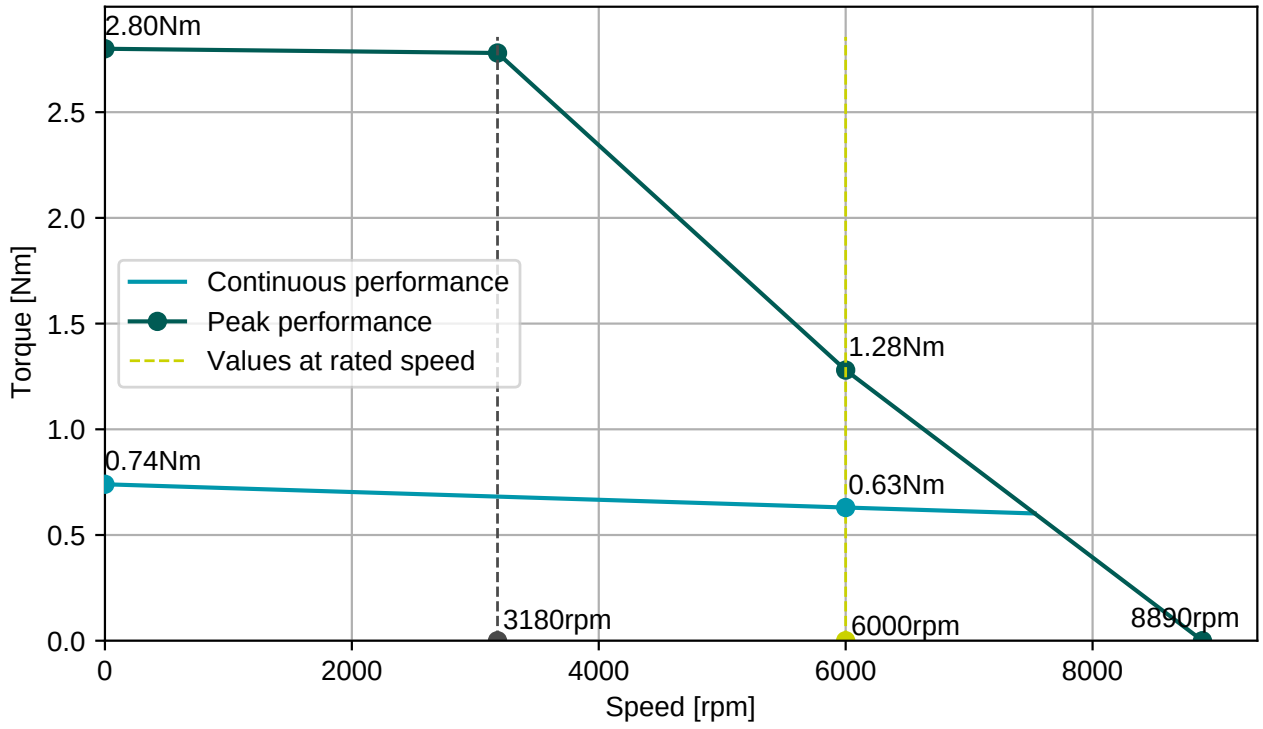

Cable SF4x1,5, D=9,6±0,4mm

Connector 1 (21)	
1	U
2	V
3	W
PE	PE
5	Brake+
6	Brake-

Numbers printed on the cables

Cable R4x2x0,25, D=6,8±0,4mm

Connector 2 (17)	
pink	R1
grey	R2
brown	S1
yellow	S2
white	S3
green	S4
red	Therm+
blue	Therm-

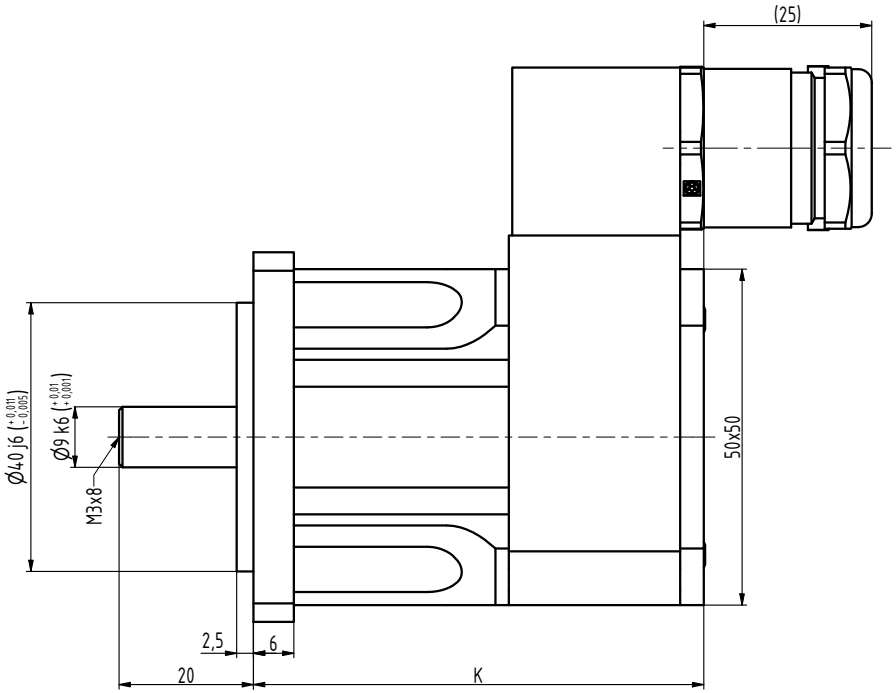

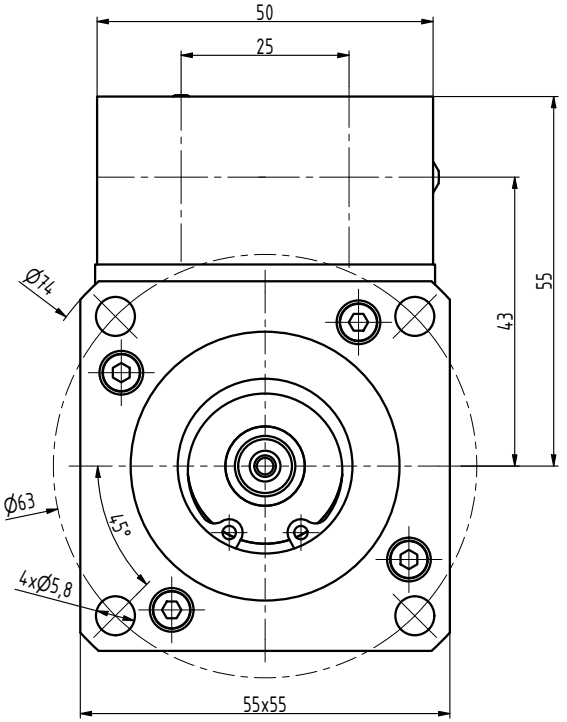

TYP	K
H2-0025	67
H2-0050	82
H2-0070	97
H2-0090	112

INDEX	ZMĚNA	DATUM	PODPIS		
ZN.MAT.			T.O.	HMOTNOST kg	MĚŘ.
ROZM.-POLOT.					
POM. ZAŘ.				ČSN	TŘ.Č.
VYPR. Ošlejšek		NORM.REF.		POZN.	Č. KUSOVNÍKU
PŘEKR.					
TECHNOL.		SCHVÁLIL Ošlejšek	04.02.2025	STARÝ V.	Č.V.

NÁZEV
Motor H2

H2002 02 Z_S2

Listů List