Engineering data (WIN 1173)		
DC bus voltage	48	V DC
Nominal AC voltage	33	V AC (rms)
Rated voltage	25	V AC (rms)
Rated power	82	W
Rated speed	3000	rpm
Rated torque	0.26	Nm
Rated current	3.54	A (rms)
Peak torque	0.94	Nm
Peak current	12.6	A (rms)
Stall torque	0.28	Nm
Stall current	3.46	A (rms)
No load speed	6520	rpm
EMF constant ±10%	4.9	V AC (rms) / 1000rpm
Theoretical torque constant ±10%	0.08	Nm / A (rms)
Torque constant ±10% @ rated load	0.07	Nm / A (rms)
Number of poles	6	
Electrical time constant	1.14	ms
Winding terminal resistance	1.93	Ω
Rotary field terminal inductance	2.2	mH

Customs info	
HS Code	85015100

Mechanical data (setting 5)		
Max mechanical speed	12000	rpm
Mech. time constant	2.54	ms
Thermal time constant	10	min
Rotor inertia	0.05	kgcm²
Protection	IP64	
Color	RAL 9005	
Cooling	Convection	
Cable length	1	m
Motor-only mass	0.9	kg
Max. axial force 20kh	41	N
Max. radial force 20kh*	216	N
Max. axial force 100kh	24	N
Max. radial force 100kh*	126	N

** Defined for point of action at ½ output shaft length*

Sensors	
Temperature	PTC 111-K13 {PTC 111-K13 Reissmann}
Feedback	6-poles resolver RE-15-3-A14

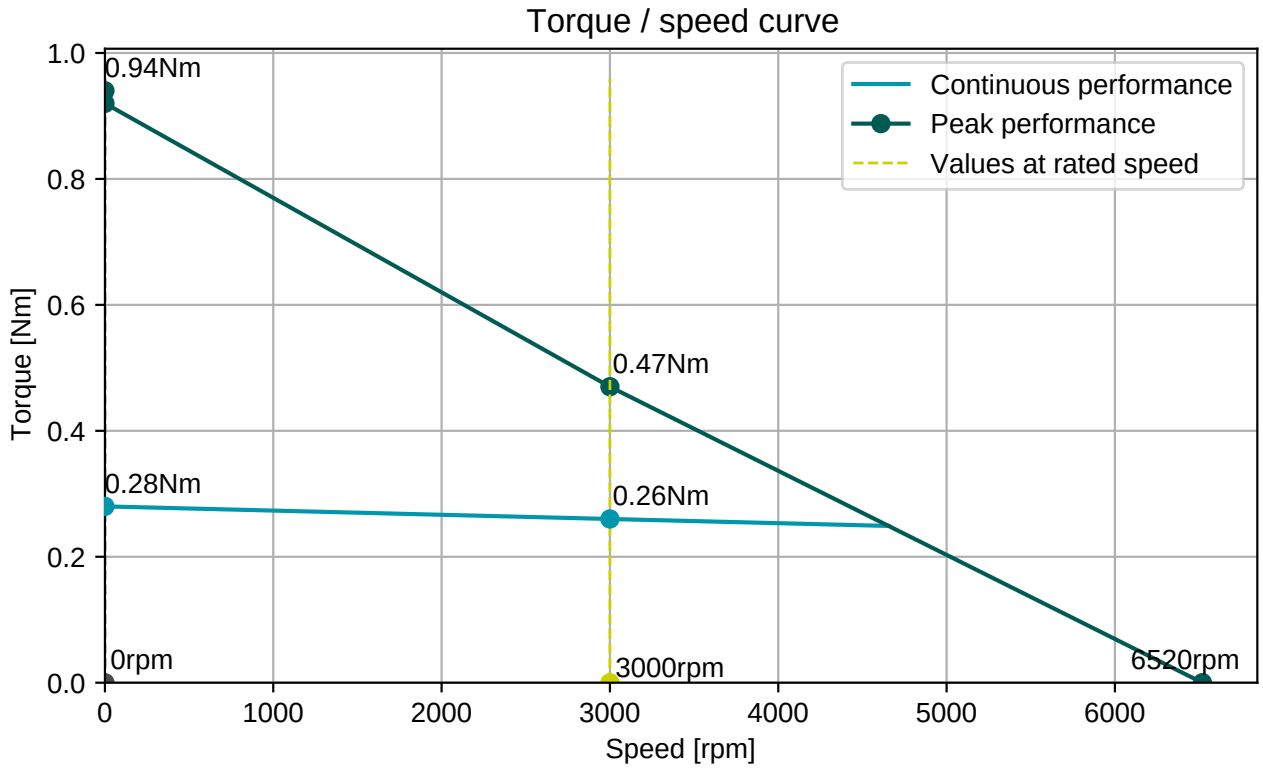

Cable SF4x1,5, D=9,6±0,4mm

Connector 1 (21)	
1	U
2	V
3	W
PE	PE
5	Brake+
6	Brake-

Numbers printed on the cables

Cable R4x2x0,25, D=6,8±0,4mm

Connector 2 (17)	
pink	R1
grey	R2
brown	S1
yellow	S2
white	S3
green	S4
red	Therm+
blue	Therm-

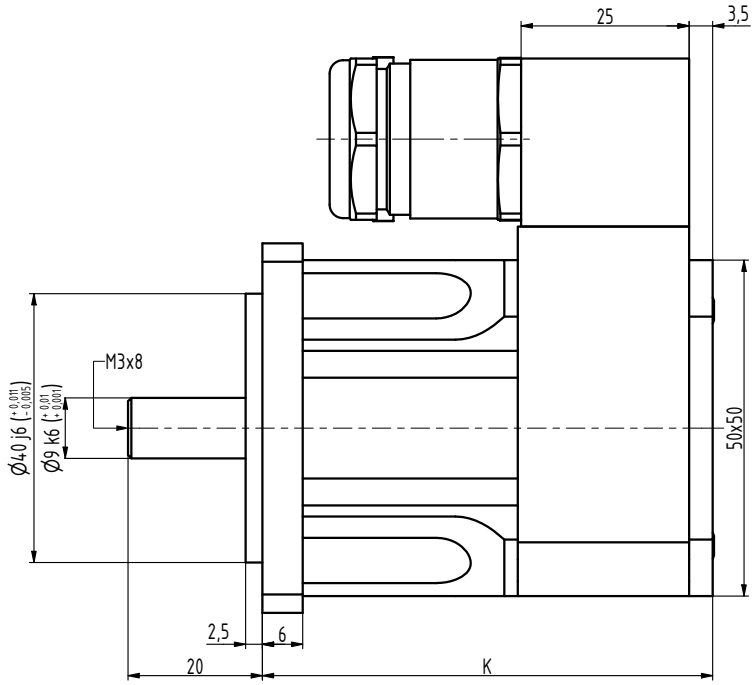

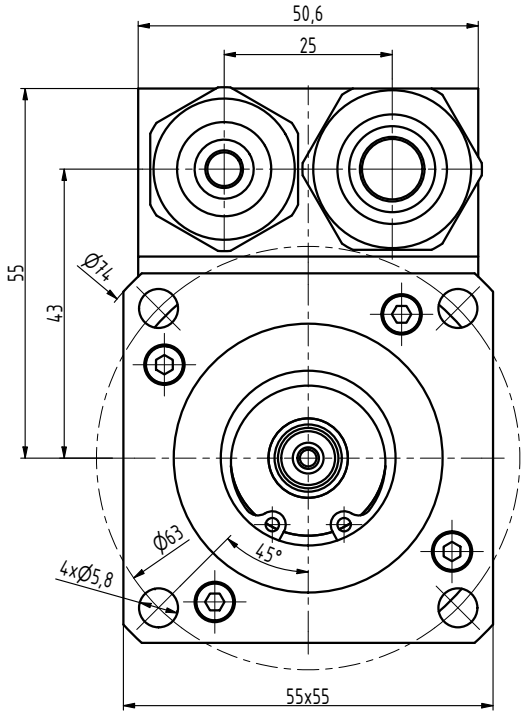

TYP	K
N2-0028	67
N2-0054	82
N2-0075	97
N2-0095	112
N2-0112	127

INDEX	ZMĚNA	DATUM	PODPIS

ZN.MAT.		T.O.	HMOTNOST kg	MĚŘ.	
ROZM.-POLOT.					
POM. ZAŘ.			ČSN	TŘ.Č.	
VYPR. Ošlejšek	NORM.REF.		POZN.	Č. KUSOVNÍKU	
PŘEKR.					
TECHNOL.	SCHVÁLIL Ošlejšek	18.7.2018	STARÝ V.	Č.V.	

NÁZEV

Motor N2

N2057 10 Z_S1

Listů List