Engineering data (WIN 777)		
DC bus voltage	36	V DC
Nominal AC voltage	25	V AC (rms)
Rated voltage	19	V AC (rms)
Rated power	160	W
Rated speed	3000	rpm
Rated torque	0.51	Nm
Rated current	7.65	A (rms)
Peak torque	2.08	Nm
Peak current	33.2	A (rms)
Stall torque	0.54	Nm
Stall current	7.6	A (rms)
No load speed	5710	rpm
EMF constant ±10%	4.3	V AC (rms) / 1000rpm
Theoretical torque constant ±10%	0.07	Nm / A (rms)
Torque constant ±10% @ rated load	0.07	Nm / A (rms)
Number of poles	6	
Electrical time constant	1.23	ms
Winding terminal resistance	0.62	Ω
Rotary field terminal inductance	0.76	mH

Customs info	
HS Code	85015100

Mechanical data (setting 48)		
Max mechanical speed	12000	rpm
Mech. time constant	1.49	ms
Thermal time constant	12	min
Rotor inertia	0.07	kgcm²
Protection	IP64	
Color	RAL 9005	
Cooling	Convection	
Motor-only mass	1.15	kg
Max. axial force 20kh	45	N
Max. radial force 20kh*	234	N
Max. axial force 100kh	26	N
Max. radial force 100kh*	137	N

** Defined for point of action at ½ output shaft length*

Sensors	
Temperature	PT1000 {PT1000}
Feedback	EDM35 (HDSL) multi-turn, 20+12 bits

Torque / speed curve

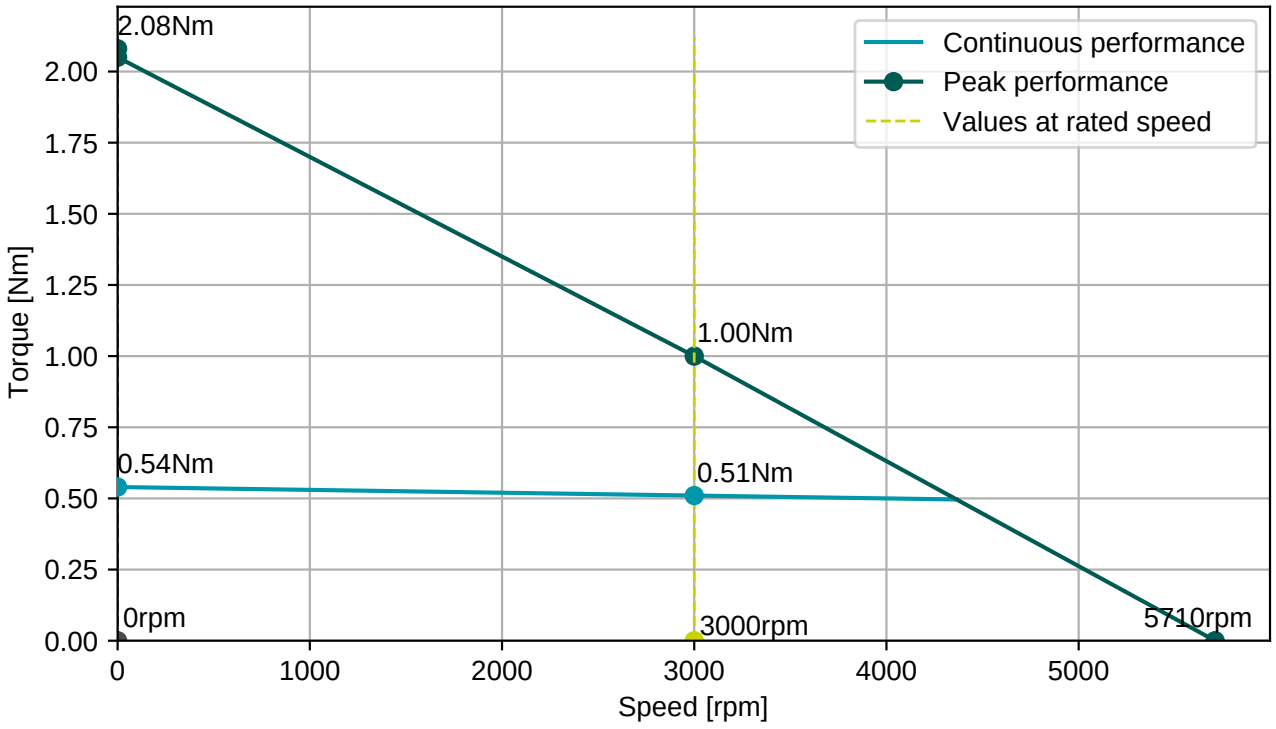

BGC110N00001216000

M23, 8 poles, rotary

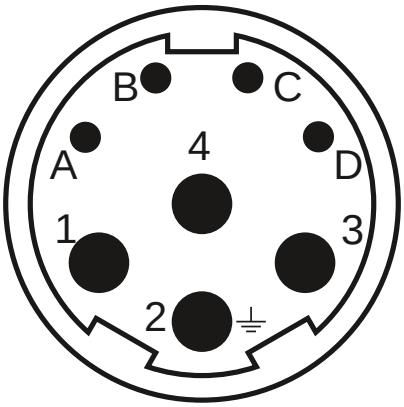

Connector 1 (283)	
1	U
4	V
3	W
2	PE
A	Brake+
B	Brake-
C	GND/DSL-
D	+Us/DSL+

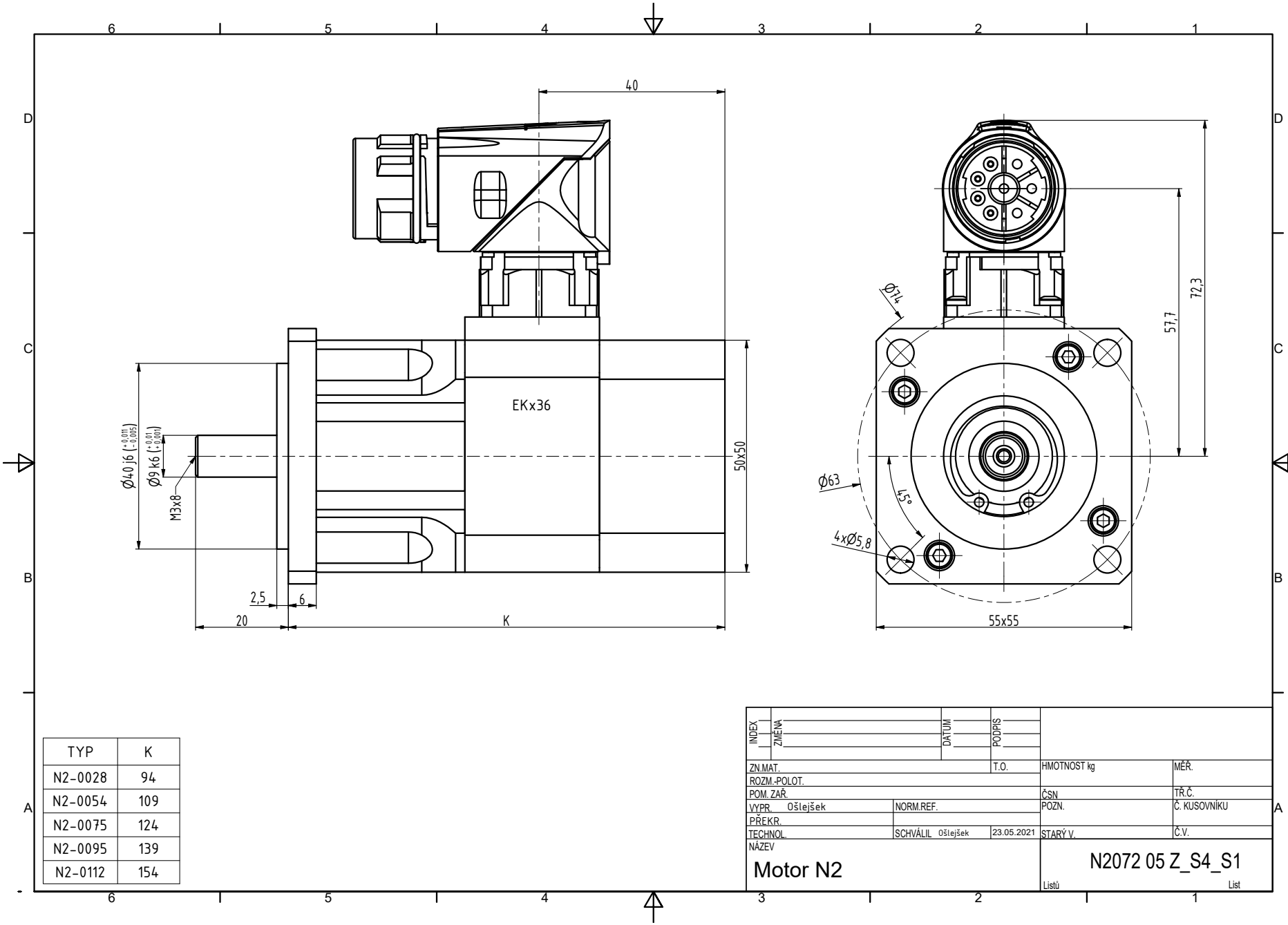

TYP	K
N2-0028	94
N2-0054	109
N2-0075	124
N2-0095	139
N2-0112	154

INDEX	ZMĚNA	DATUM	PODPIS

ZN.MAT.		T.O.	HMOTNOST kg	MĚŘ.
ROZM.-POLOT.				
POM. ZAŘ.			ČSN	TŘ.Č.
VYPR. Ošlejšek	NORM.REF.		POZN.	Č. KUSOVNÍKU
PŘEKR.				
TECHNOL.	SCHVÁLIL Ošlejšek	23.05.2021	STARÝ V.	Č.V.

NÁZEV
Motor N2

N2072 05 Z_S4_S1

Listů List