Engineering data (WIN 1359)		
DC bus voltage	320	V DC
Nominal AC voltage	220	V AC (rms)
Rated voltage	152	V AC (rms)
Rated power	440	W
Rated speed	3000	rpm
Rated torque	1.40	Nm
Rated current	2.07	A (rms)
Peak torque	6.65	Nm
Peak current	9.9	A (rms)
Stall torque	1.75	Nm
Stall current	2.23	A (rms)
No load speed	4610	rpm
EMF constant ±10%	47.5	V AC (rms) / 1000rpm
Theoretical torque constant ±10%	0.786	Nm / A (rms)
Torque constant ±10% @ rated load	0.676	Nm / A (rms)
Number of poles	10	
Electrical time constant	1.44	ms
Winding terminal resistance	7.3	Ω
Rotary field terminal inductance	10.5	mH

Customs info	
HS Code	85015100

Mechanical data (setting 48)		
Max mechanical speed	12000	rpm
Mech. time constant	1.39	ms
Thermal time constant	28	min
Rotor inertia	0.68	kgcm²
Protection	IP67	
Color	RAL 9005	
Cooling	Convection	
Motor-only mass	1.9	kg
Max. axial force 20kh	64	N
Max. radial force 20kh*	357	N
Max. axial force 100kh	37	N
Max. radial force 100kh*	195	N

** Defined for point of action at ½ output shaft length*

Sensors	
Temperature	PT1000 {PT1000}
Feedback	EKM36 (HDSL) multi-turn, 17 + 12 bits

Torque / speed curve

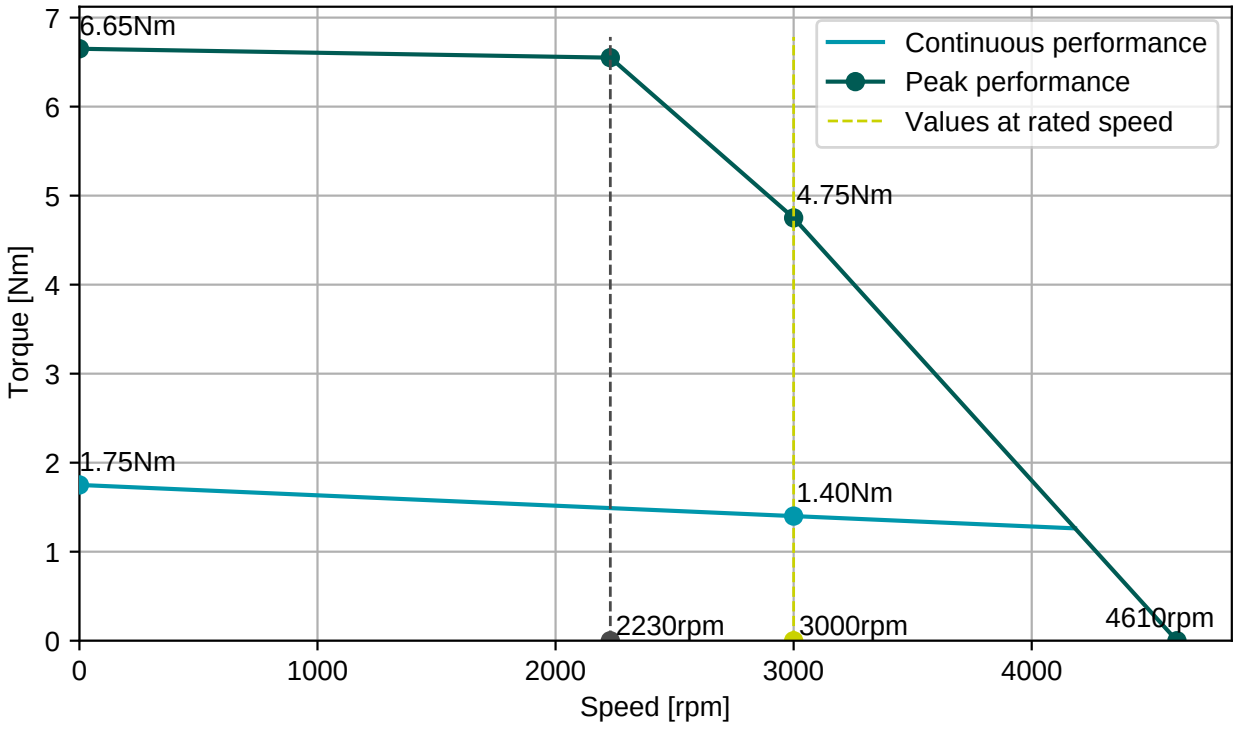

Cable DSL4x1 (2x0,25) , D=10,3±0,4mm

Connector 1 (306)	
1	U
2	V
3	W
PE	PE
5	Brake+
6	Brake-
brown	+Us/DSL+
white	GND/DSL-

Numbers printed on the cables

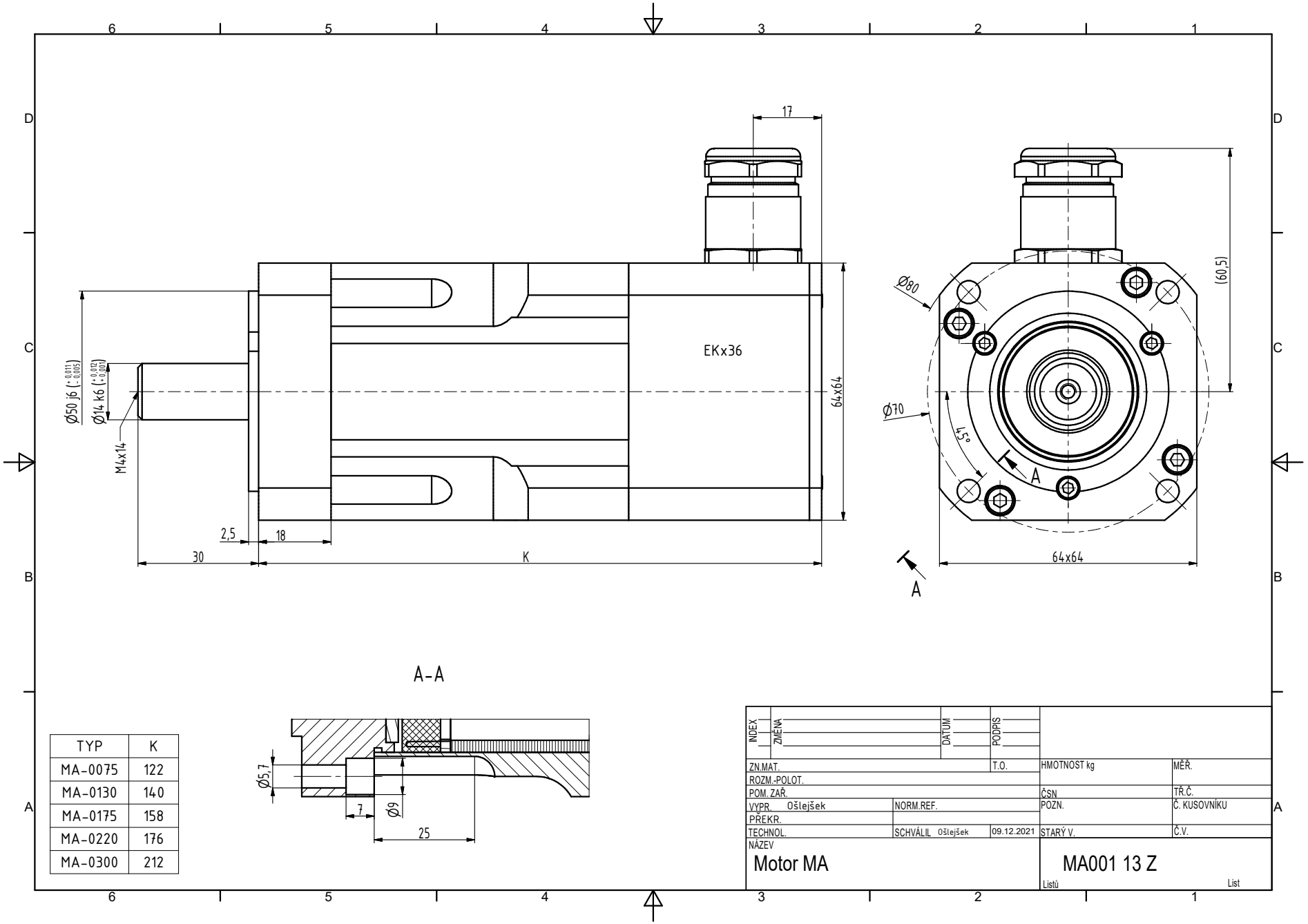

TYP	K
MA-0075	122
MA-0130	140
MA-0175	158
MA-0220	176
MA-0300	212

INDEX	ZMĚNA	DATUM	PODPIS

ZN.MAT.	T.O.	HMOTNOST kg	MĚŘ.
ROZM.-POLOT.			
POM. ZAŘ.		ČSN	TŘ.Č.
VYPR. Ošlejšek	NORM.REF.	POZN.	Č. KUSOVNÍKU
PŘEKR.			
TECHNOL.	SCHVÁLIL Ošlejšek 09.12.2021	STARÝ V.	Č.V.

NÁZEV
Motor MA

MA001 13 Z

Listů List