Engineering motordata (WIN 1272)		
DC bus voltage	320	V DC
Nominal AC voltage	220	V AC (rms)
Rated voltage	115	V AC (rms)
Rated power	113	W
Rated speed	4500	rpm
Rated torque	0.24	Nm
Rated current	0.93	A (rms)
Peak torque	1	Nm
Peak current	4	A (rms)
Stall torque	0.26	Nm
Stall current	0.9	A (rms)
No load speed	12250	rpm
EMF constant ±10%	17.5	V AC (rms) / 1000rpm
Theoretical torque constant ±10%	0.289	Nm / A (rms)
Torque constant ±10% @ rated load	0.258	Nm / A (rms)
Number of poles	6	
Electrical time constant	1.05	ms
Winding terminal resistance	27.092	Ω
Rotary field terminal inductance	28.4	mH

Customs info	
HS Code	85015100

Mechanical motor data (setting 48)		
Max mechanical speed	12000	rpm
Mech. time constant	2.80	ms
Thermal time constant	12	min
Rotor inertia	0.05	kgcm²
Protection	IP64	
Color	RAL 9005	
Cooling	Convection	
Motor-only mass	0.6	kg

Sensors	
Temperature	PT1000 {PT1000}
Feedback	EKS36 (HDSL) single-turn, 18 bits, SIL2

Brake		
Braking torque	0.40	Nm
Voltage	24	V DC
Power @20°C	8.0	W
Current @20°C	0.33	A
Inertia	0.02	kgcm²
Mass	0.10	kg

Gearbox engineering data		
Gear ratio	47	
Efficiency*	95	%
Torsional stiffness	2.5	Nm/arcmin
Rated output torque	18	Nm
Max output torque	36	Nm
Emergency output torque	90	Nm
Rated input speed	2000	rpm
Max input speed	5000	rpm
Operating temperature	<-25; 50>	°C
Max. backlash	< 1.5	arcmin
Service life	6000	h

** at rated speed & torque*

Lubrication	
Type	Standard
Lubricant	TRIBOL GR TT 1 PD

Gearbox mechanical data		
Max. radial force	1440	N
Max. axial force	1900	N
Output shaft design	Flange	
Mass	0.47	kg
Input inertia	0.007	kgcm²
Protection	IP64	

Actuator data		
Rated speed	43	rpm
Rated torque	11.21	Nm
Peak torque	36.00	Nm
Emergency stop torque	47.00	Nm
EMF constant ±10%	822.5	V AC (rms) / 1000rpm
Torque constant ±10% @ rated load	11.52	Nm / A (rms)
Total mass	1.17	kg
Output inertia	125.9	kgcm²

Torque / speed curve

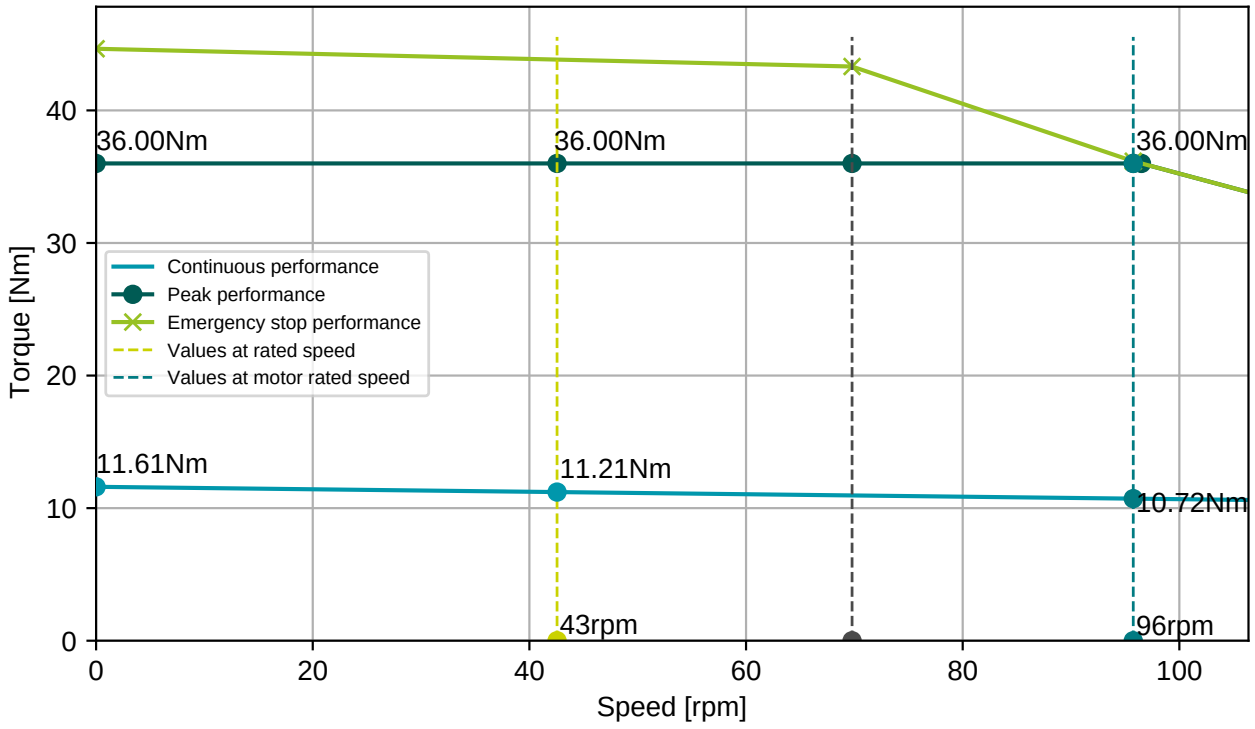

BGC110N00001216000

M23, 8 poles, rotary

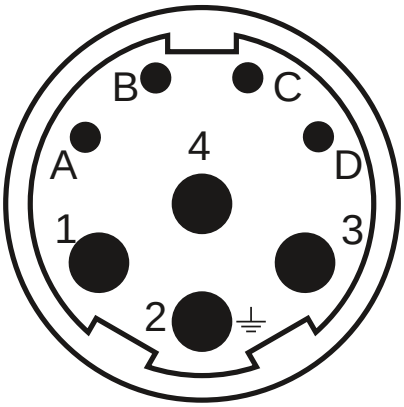

Connector 1 (283)	
1	U
4	V
3	W
2	PE
A	Brake+
B	Brake-
C	GND/DSL-
D	+Us/DSL+

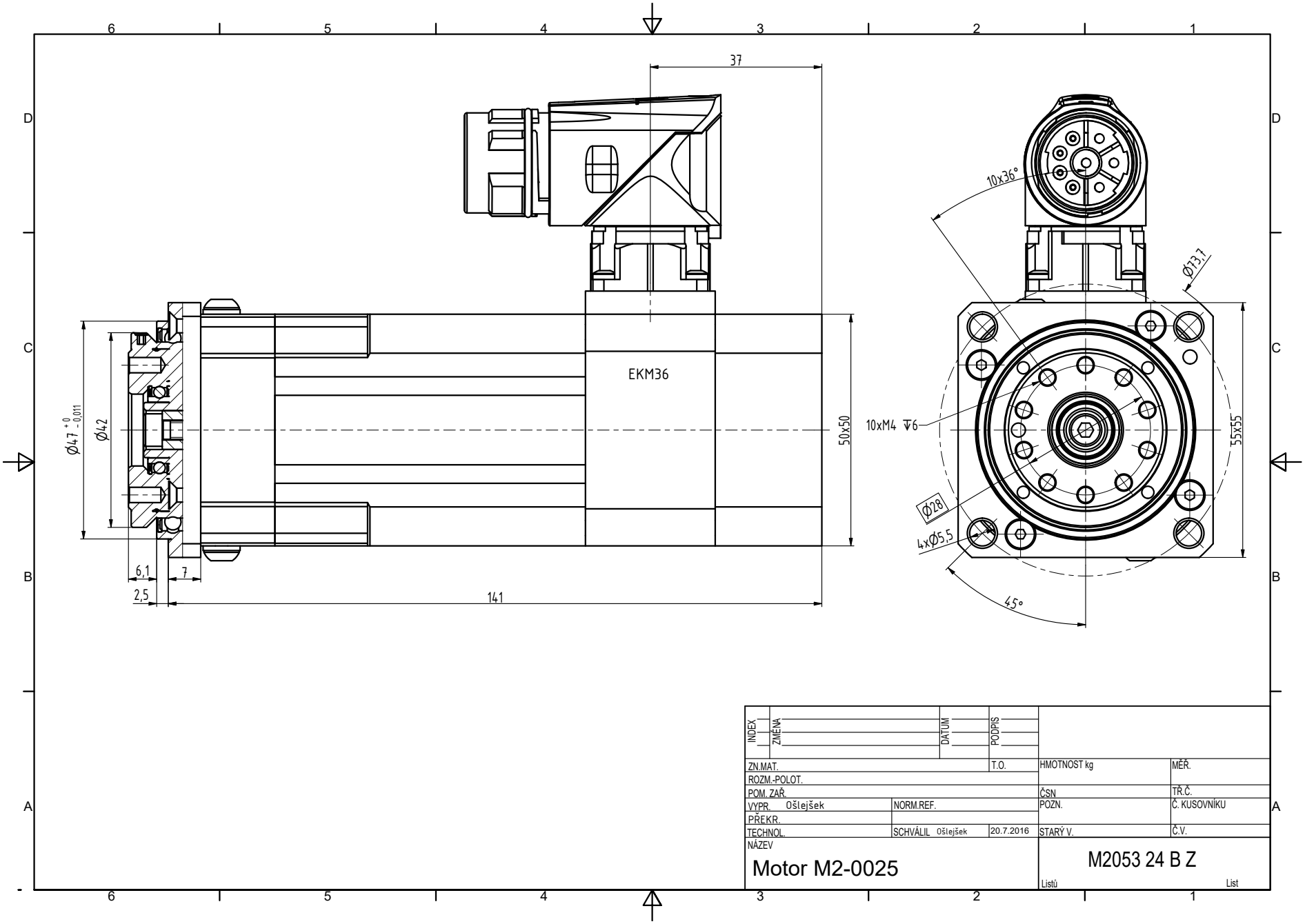
37
EKM36
50x50
Ø47 +0 -0,011
Ø42
6,1
7
2,5
141
10x36°
Ø13,7
10xM4 ↧6
55x55
Ø28
4xØ5,5
45°
INDEX
ZMĚNA
DATUM
PODPIS
ZN.MAT.
T.O.
HMOTNOST kg
MĚŘ.
ROZM.-POLOT.
POM. ZAŘ.
ČSN
TŘ.Č.
VYPR. Ošlejšek
NORM.REF.
POZN.
Č. KUSOVNÍKU
PŘEKR.
TECHNOL.
SCHVÁLIL Ošlejšek
20.7.2016
STARÝ V.
Č.V.
NÁZEV
Motor M2-0025
M2053 24 B Z
Listů
List