Engineering data (WIN -707)		
DC bus voltage	560	V DC
Nominal AC voltage	380	V AC (rms)
Rated voltage	311	V AC (rms)
Rated power	7.5	kW
Rated speed	400	rpm
Rated torque	180.00	Nm
Rated current	15.9	A (rms)
Peak torque	870	Nm
Peak current	103.31	A (rms)
Stall torque	290	Nm
Stall current	24.25	A (rms)
No load speed	520	rpm
EMF constant ±10%	723	V AC (rms) / 1000rpm
Theoretical torque constant ±10%	11.96	Nm / A (rms)
Torque constant ±10% @ rated load	11.32	Nm / A (rms)
Number of poles	52	
Electrical time constant	14.89	ms
Winding terminal resistance	0.37	Ω
Rotary field terminal inductance	5.51	mH

Customs info	
HS Code	85015230

Mechanical data (setting 6)		
Max mechanical speed	2000	rpm
Mech. time constant	0.73	ms
Thermal time constant	80	min
Rotor inertia	1635	kgcm²
Protection	IP00	
Color	RAL 9005	
Cooling	Convection	
Motor-only mass	30.1	kg

Sensors	
Temperature	PT1000 {PT1000}

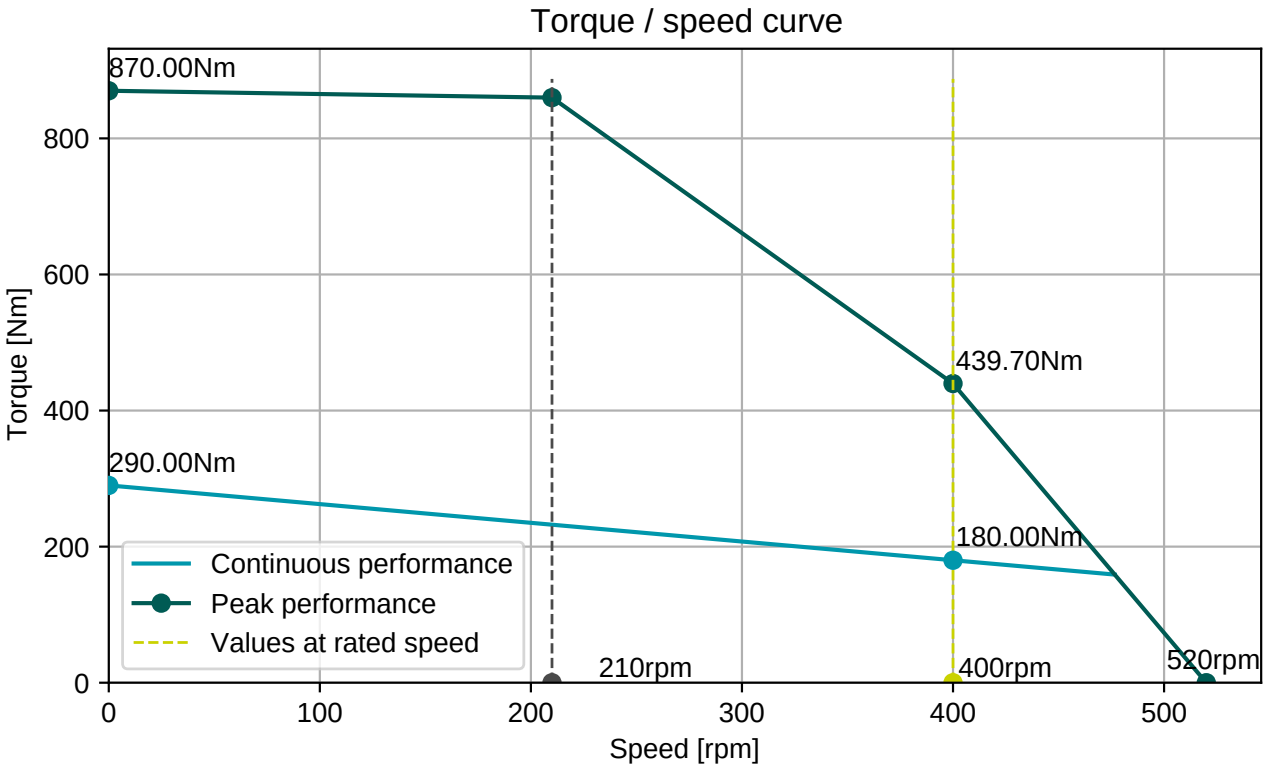

Connector 1 (259)	
white	U
blue	V
red	W

2x Therm
2x Brake

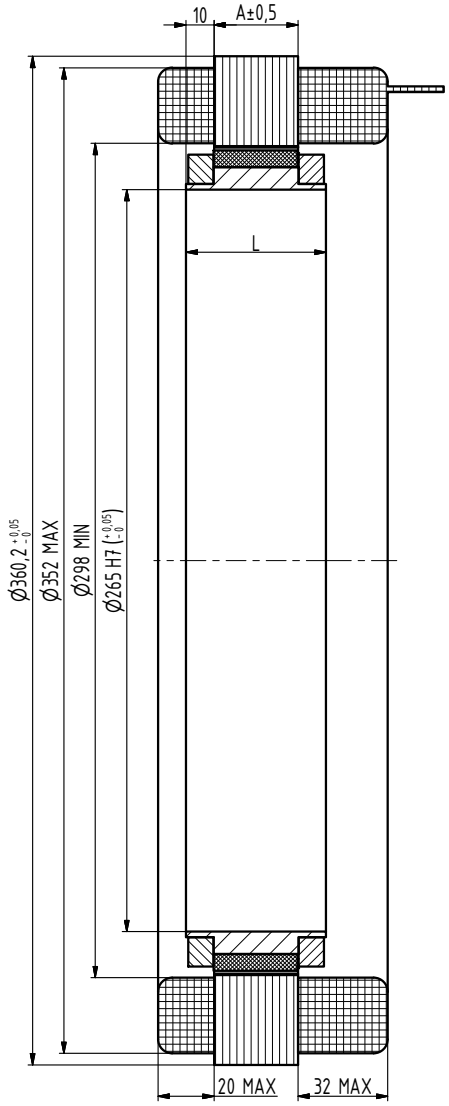

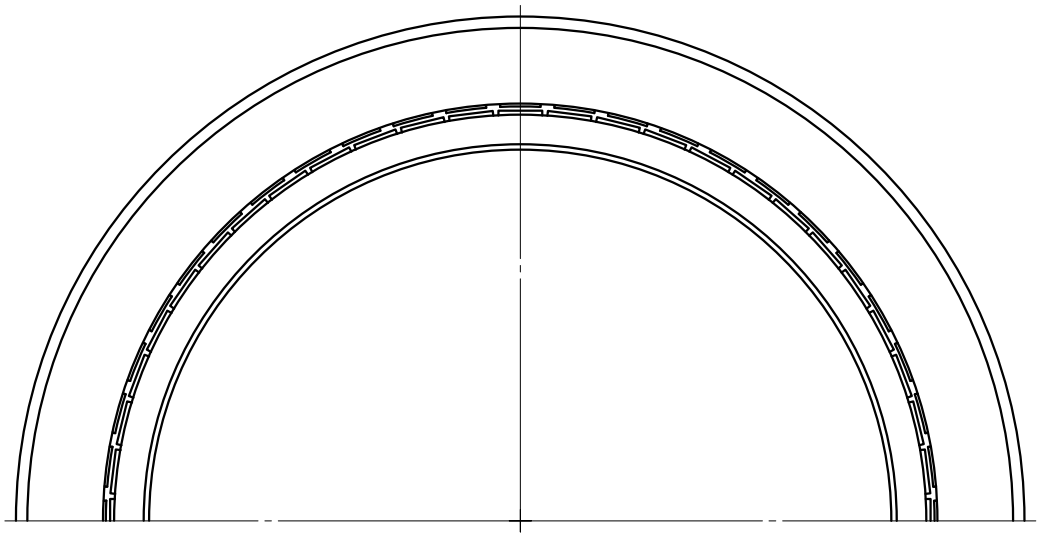

TYP	A	L
Q7-1050	30	50
Q7-2000	60	80
Q7-2900	90	110
Q7-3800	120	140
Q7-4690	150	170

INDEX	ZMĚNA	DATUM	PODPIS

ZN.MAT.		T.O.	HMOTNOST kg	MĚŘ.
ROZM.-POLOT.				
POM. ZAŘ.			ČSN	TŘ.Č.
VYPR. Šimík	NORM.REF.		POZN.	Č. KUSOVNÍKU
PŘEKR. Šimík 15.11.2017				
TECHNOL.	SCHVÁLIL Ošlejšek	19.10.2016	STARÝ V.	Č.V.

NÁZEV
Motor Q7

Q7000 00 Z

Listů List