Engineering data (WIN -703)		
DC bus voltage	320	V DC
Nominal AC voltage	220	V AC (rms)
Rated voltage	174	V AC (rms)
Rated power	6.6	kW
Rated speed	200	rpm
Rated torque	313.00	Nm
Rated current	25.83	A (rms)
Peak torque	1140	Nm
Peak current	128.11	A (rms)
Stall torque	380	Nm
Stall current	30.07	A (rms)
No load speed	290	rpm
EMF constant ±10%	764	V AC (rms) / 1000rpm
Theoretical torque constant ±10%	12.64	Nm / A (rms)
Torque constant ±10% @ rated load	12.12	Nm / A (rms)
Number of poles	52	
Electrical time constant	16.50	ms
Winding terminal resistance	0.28	Ω
Rotary field terminal inductance	4.62	mH

Customs info	
HS Code	85015220

Mechanical data (setting 6)		
Max mechanical speed	2000	rpm
Mech. time constant	0.66	ms
Thermal time constant	91	min
Rotor inertia	2180	kgcm²
Protection	IP00	
Color	RAL 9005	
Cooling	Convection	
Motor-only mass	39	kg

Sensors	
Temperature	PT1000 {PT1000}

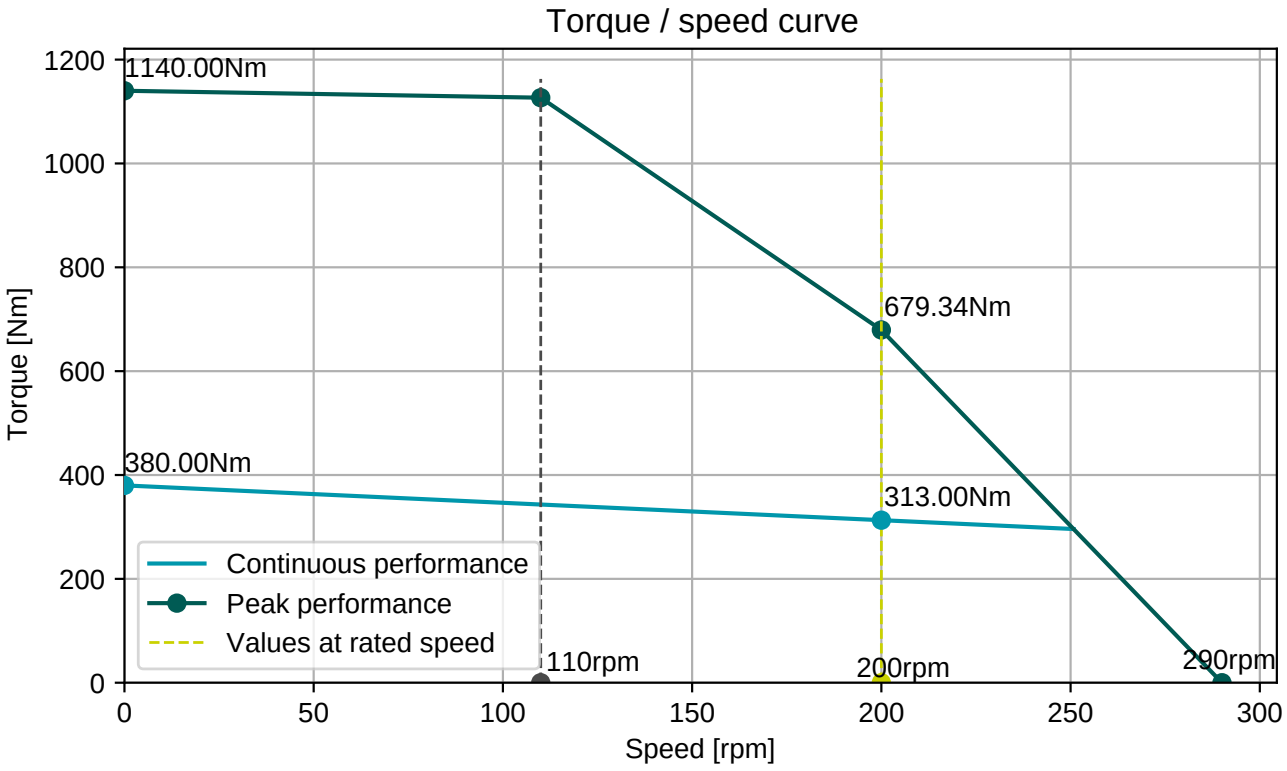

Connector 1 (259)	
white	U
blue	V
red	W

2x Therm
2x Brake

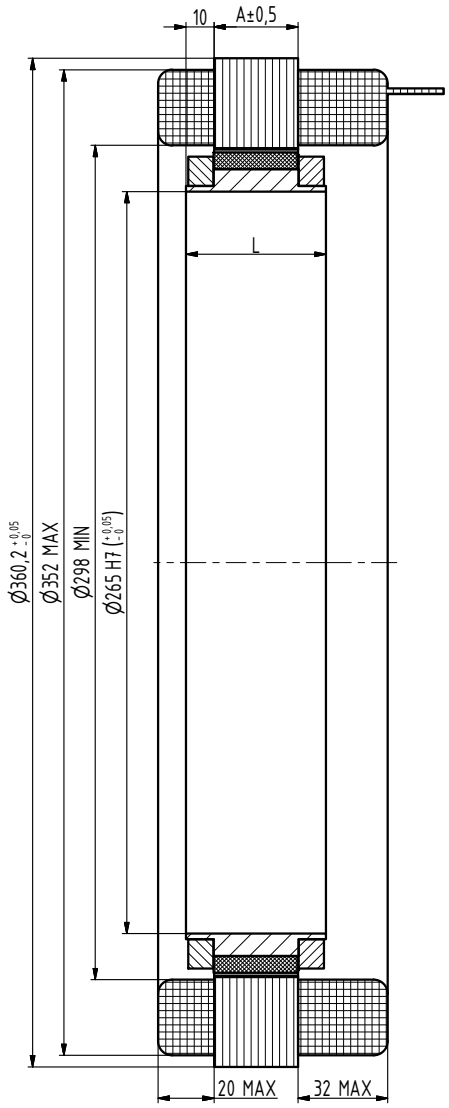

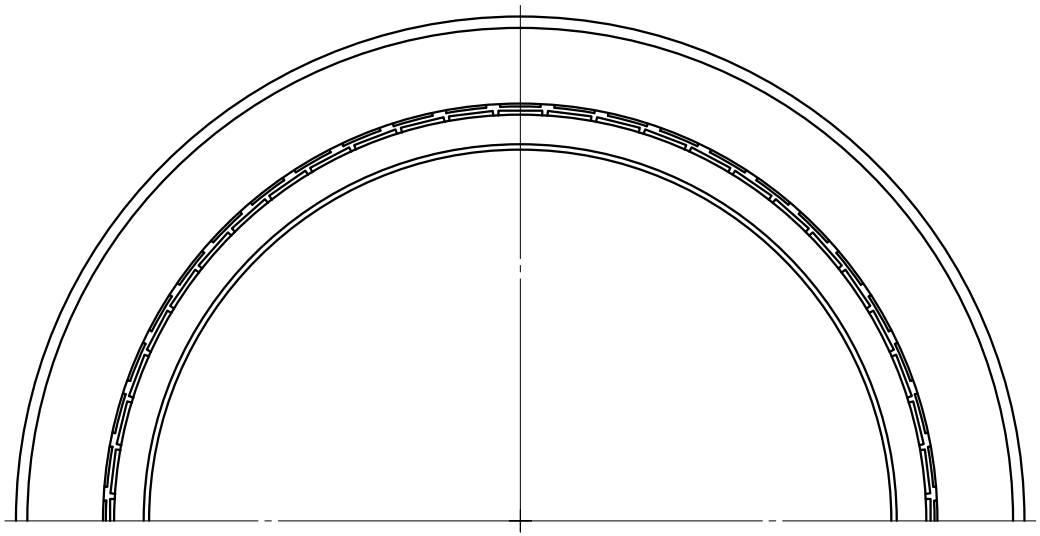

TYP	A	L
Q7-1050	30	50
Q7-2000	60	80
Q7-2900	90	110
Q7-3800	120	140
Q7-4690	150	170

INDEX	ZMĚNA	DATUM	PODPIS

ZN.MAT.		T.O.	HMOTNOST kg	MĚŘ.
ROZM.-POLOT.				
POM. ZAŘ.			ČSN	TŘ.Č.
VYPR. Šimík	NORM.REF.		POZN.	Č. KUSOVNÍKU
PŘEKR. Šimík 15.11.2017				
TECHNOL.	SCHVÁLIL Ošlejšek	19.10.2016	STARÝ V.	Č.V.

NÁZEV
Motor Q7

Q7000 00 Z

Listů List