Engineering data (WIN -102)		
DC bus voltage	320	V DC
Nominal AC voltage	220	V AC (rms)
Rated voltage	182	V AC (rms)
Rated power	963	W
Rated speed	2000	rpm
Rated torque	4.60	Nm
Rated current	3.69	A (rms)
Peak torque	20.6	Nm
Peak current	18.38	A (rms)
Stall torque	5.15	Nm
Stall current	3.89	A (rms)
No load speed	2740	rpm
EMF constant ±10%	80	V AC (rms) / 1000rpm
Theoretical torque constant ±10%	1.32	Nm / A (rms)
Torque constant ±10% @ rated load	1.25	Nm / A (rms)
Number of poles	16	
Electrical time constant	2.21	ms
Winding terminal resistance	3.5	Ω
Rotary field terminal inductance	7.73	mH

Customs info	
HS Code	85015220

Mechanical data (setting 6)		
Max mechanical speed	9000	rpm
Mech. time constant	0.88	ms
Thermal time constant	36	min
Rotor inertia	2.55	kgcm²
Protection	IP00	
Color	RAL 9005	
Cooling	Convection	
Motor-only mass	2.05	kg

Sensors	
Temperature	PT1000 {PT1000}

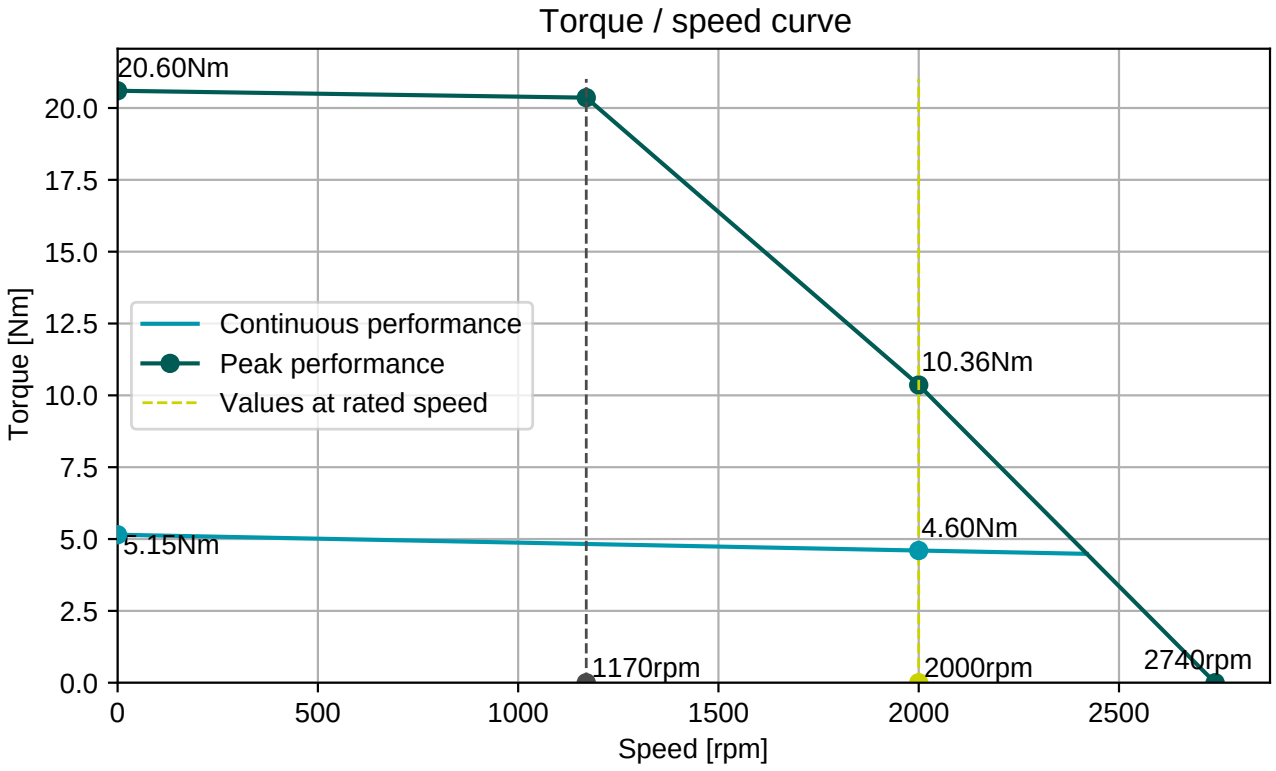

Connector 1 (259)	
white	U
blue	V
red	W

2x Therm
2x Brake

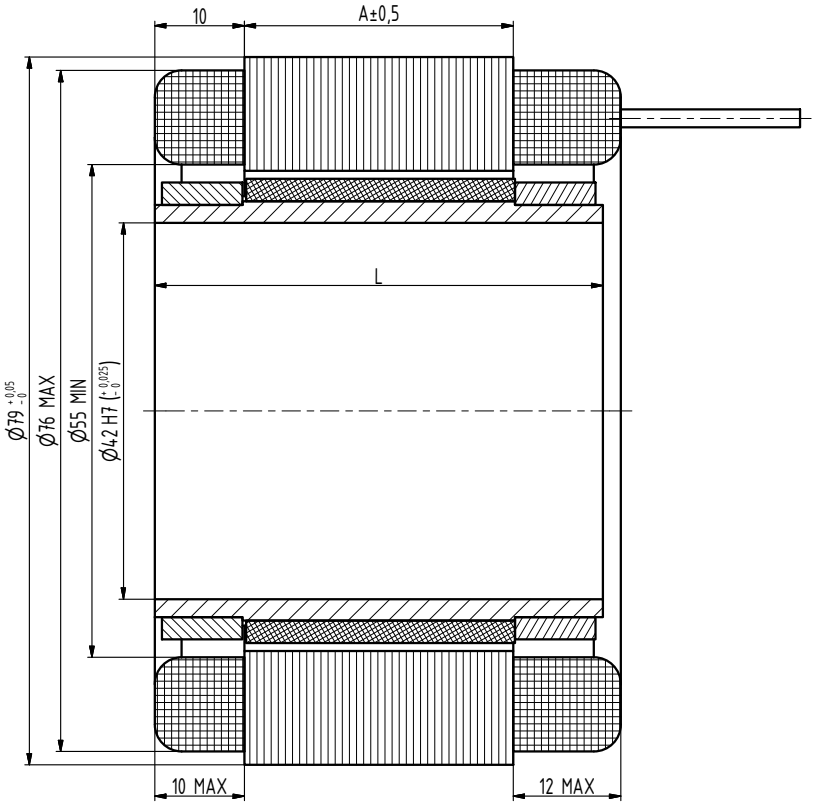

TYP	A	L
Q1-0225	30	50
Q1-0375	60	80
Q1-0515	90	110
Q1-0700	120	140
Q1-0850	150	170

INDEX	ZMĚNA	DATUM	PODPIS
a	oprava rozměru pro 0850	7.11.17	RŠ

ZN.MAT.	T.O.	HMOTNOST kg	MĚŘ. 2:1
ROZM.-POLOT.			
POM. ZAŘ.		ČSN	TŘ.Č.
VYPR. Šimík	NORM.REF.	POZN.	Č. KUSOVNÍKU
PŘEZK.			
TECHNOL.	SCHVÁLIL Ošlejšek 19.10.2016	STARÝ V.	Č.V.

NÁZEV: Motor Q1

Q1000 00 Z a

Listů: List