Engineering motordata (WIN 1309)		
DC bus voltage	560	V DC
Nominal AC voltage	380	V AC (rms)
Rated voltage	269	V AC (rms)
Rated power	1.3	kW
Rated speed	3000	rpm
Rated torque	4.00	Nm
Rated current	3.16	A (rms)
Peak torque	15	Nm
Peak current	15.8	A (rms)
Stall torque	4.4	Nm
Stall current	3.28	A (rms)
No load speed	4680	rpm
EMF constant ±10%	81	V AC (rms) / 1000rpm
Theoretical torque constant ±10%	1.34	Nm / A (rms)
Torque constant ±10% @ rated load	1.27	Nm / A (rms)
Number of poles	10	
Electrical time constant	6.33	ms
Winding terminal resistance	2.75	Ω
Rotary field terminal inductance	17.4	mH

Customs info	
HS Code	85015220

Mechanical motor data (setting 48)		
Max mechanical speed	9000	rpm
Mech. time constant	1.25	ms
Thermal time constant	30	min
Rotor inertia	4.7	kgcm²
Protection	IP64	
Color	RAL 9005	
Cooling	Convection	
Motor-only mass	10	kg

Sensors	
Temperature	PT1000 {PT1000}
Feedback	EKS36 (HDSL) single-turn, 18 bits, SIL2

Gearbox engineering data		
Gear ratio	115	
Efficiency*	70	%
Torsional stiffness	22	Nm/arcmin
Rated output torque	268	Nm
Max output torque	670	Nm
Rated input speed	2000	rpm
Max input speed	4500	rpm
Operating temperature	<-25; 50>	°C
Max. backlash	< 1	arcmin
Service life	6000	h

** at rated speed & torque*

Lubrication	
Type	Standard
Lubricant	Grease Castrol TRIBOL GR TT 1 PD

Gearbox mechanical data		
Max. radial force	11500	N
Max. axial force	17000	N
Output shaft design	Flange	
Mass	7.6	kg
Input inertia	5.5	kgcm²
Protection	IP64	

Actuator data		
Rated speed	17	rpm
Rated torque	268.00	Nm
Peak torque	670.00	Nm
EMF constant ±10%	9315.0	V AC (rms) / 1000rpm
Torque constant ±10% @ rated load	101.90	Nm / A (rms)
Total mass	17.60	kg
Output inertia	134895.0	kgcm²

Torque / speed curve

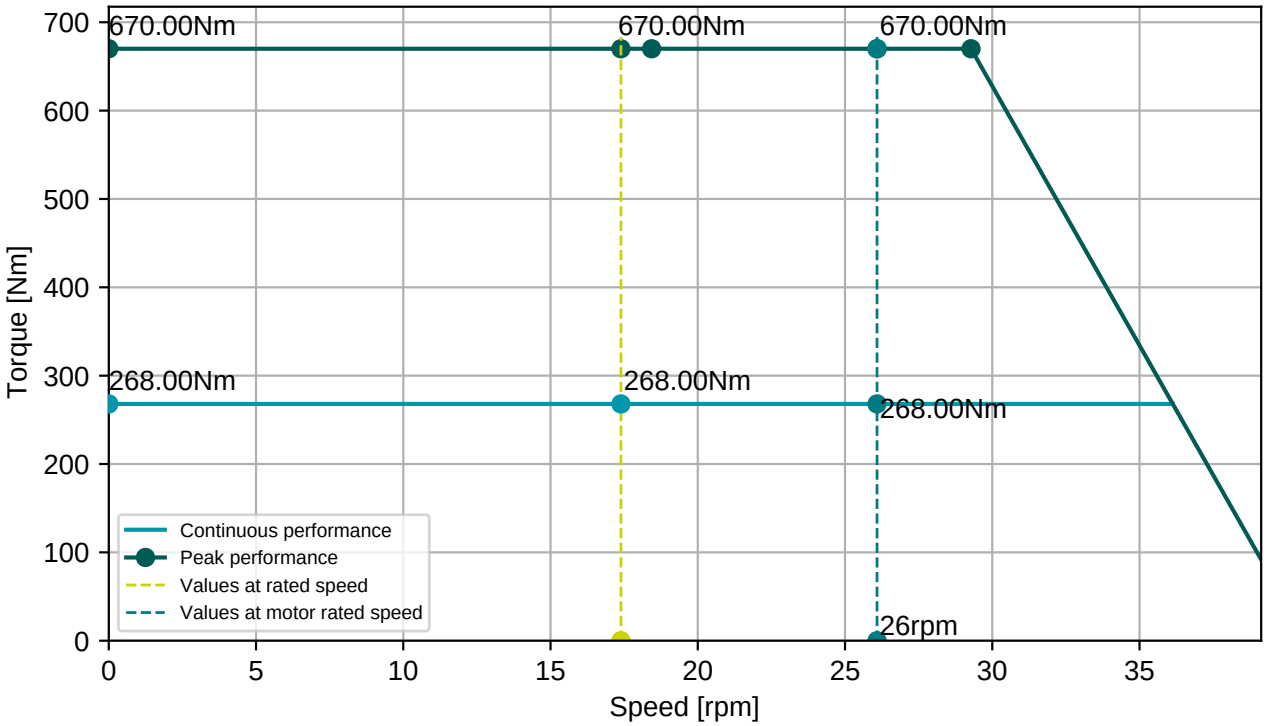

BEA120N00000200000

M23, 8 poles, straight

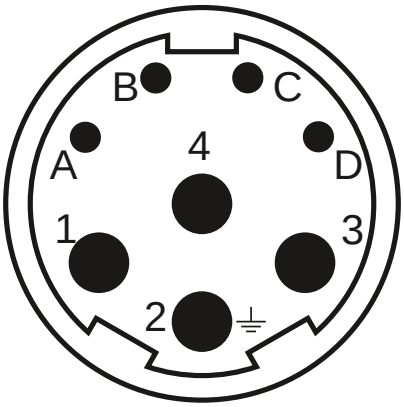

Connector 1 (283)	
1	U
4	V
3	W
2	PE
A	Brake+
B	Brake-
C	GND/DSL-
D	+Us/DSL+

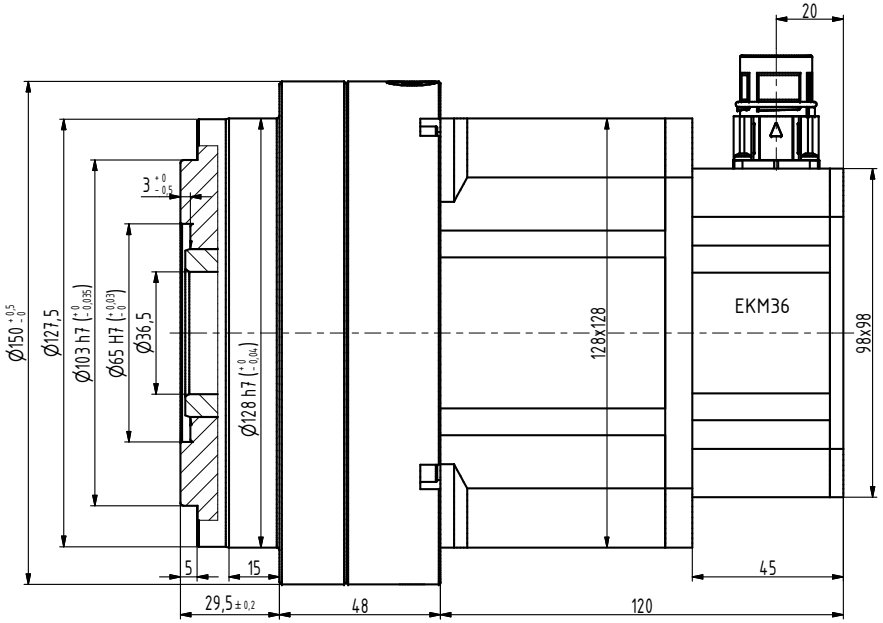

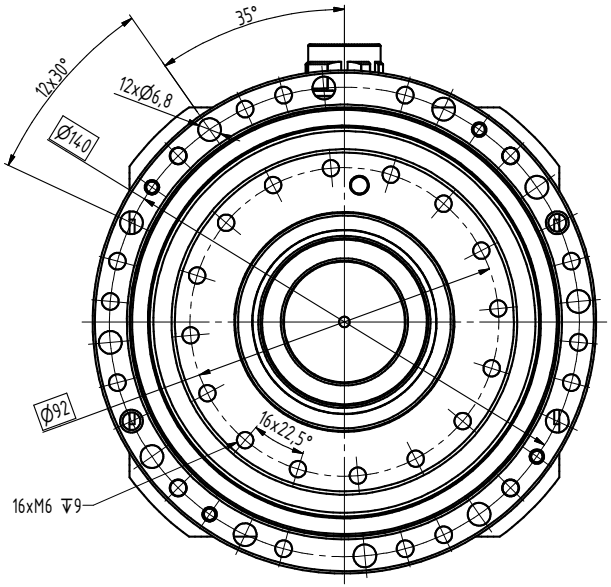

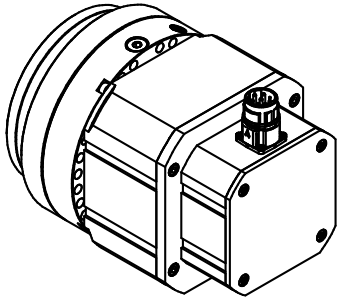

INDEX	ZMĚNA	DATUM	PODPIS		
ZN.MAT.			T.O.	HMOTNOST kg	MĚŘ.
ROZM.-POLOT.					
POM. ZAŘ.				ČSN	TŘ.Č.
VYPR. Ošlejšek	NORM.REF.			POZN.	Č. KUSOVNÍKU
PŘEZK.					
TECHNOL.	SCHVÁLIL Ošlejšek	27.6.2018		STARÝ V.	Č.V.

NÁZEV

Motor M5-0650

M5112 02

Listů List