Engineering motordata (WIN 1217)		
DC bus voltage	560	V DC
Nominal AC voltage	380	V AC (rms)
Rated voltage	245	V AC (rms)
Rated power	358	W
Rated speed	4500	rpm
Rated torque	0.76	Nm
Rated current	1.15	A (rms)
Peak torque	2.4	Nm
Peak current	4.3	A (rms)
Stall torque	0.95	Nm
Stall current	1.17	A (rms)
No load speed	7690	rpm
EMF constant ±10%	49	V AC (rms) / 1000rpm
Theoretical torque constant ±10%	0.81	Nm / A (rms)
Torque constant ±10% @ rated load	0.66	Nm / A (rms)
Number of poles	10	
Electrical time constant	1.97	ms
Winding terminal resistance	17.255	Ω
Rotary field terminal inductance	34	mH

Customs info	
HS Code	85015100

Mechanical motor data (setting 48)		
Max mechanical speed	12000	rpm
Mech. time constant	2.27	ms
Thermal time constant	25	min
Rotor inertia	0.5	kgcm²
Protection	IP64	
Color	RAL 9005	
Cooling	Convection	
Motor-only mass	2.5	kg

Sensors	
Temperature	PT1000 {PT1000}
Feedback	EKS36 (HDSL) single-turn, 17 bits

Gearbox engineering data		
Gear ratio	75	
Efficiency*	70	%
Torsional stiffness	8	Nm/arcmin
Rated output torque	50	Nm
Max output torque	125	Nm
Rated input speed	2000	rpm
Max input speed	5000	rpm
Operating temperature	<-25; 50>	°C
Max. backlash	< 0.5	arcmin
Service life	6000	h

** at rated speed & torque*

Lubrication	
Type	Standard
Lubricant	Mobil SHC150

Gearbox mechanical data		
Max. radial force	2800	N
Max. axial force	4100	N
Output shaft design	Flange	
Mass	1.35	kg
Input inertia	0.061	kgcm²
Protection	IP64	

Actuator data		
Rated speed	27	rpm
Rated torque	45.44	Nm
Peak torque	125.00	Nm
EMF constant ±10%	3675.0	V AC (rms) / 1000rpm
Torque constant ±10% @ rated load	34.70	Nm / A (rms)
Total mass	3.85	kg
Output inertia	3155.6	kgcm²

Torque / speed curve

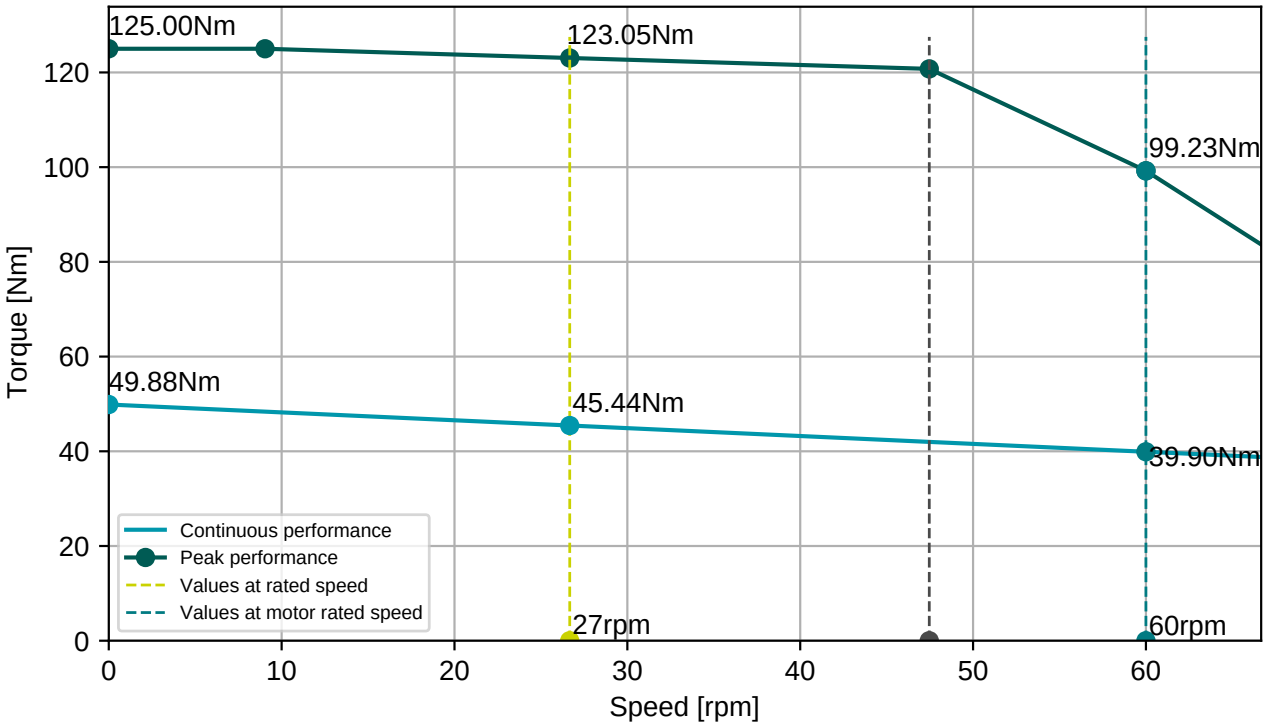

BGC110N00001216000

M23, 8 poles, rotary

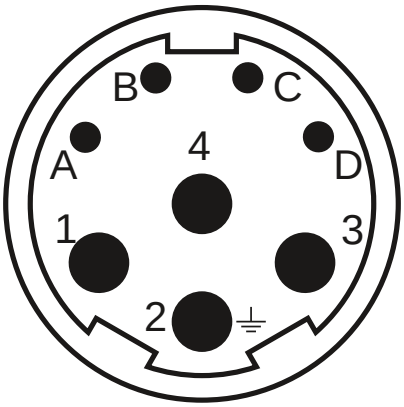

Connector 1 (283)	
1	U
4	V
3	W
2	PE
A	Brake+
B	Brake-
C	GND/DSL-
D	+Us/DSL+

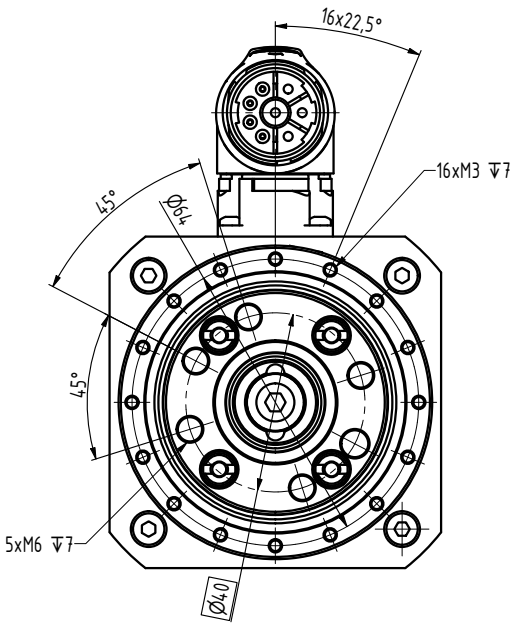

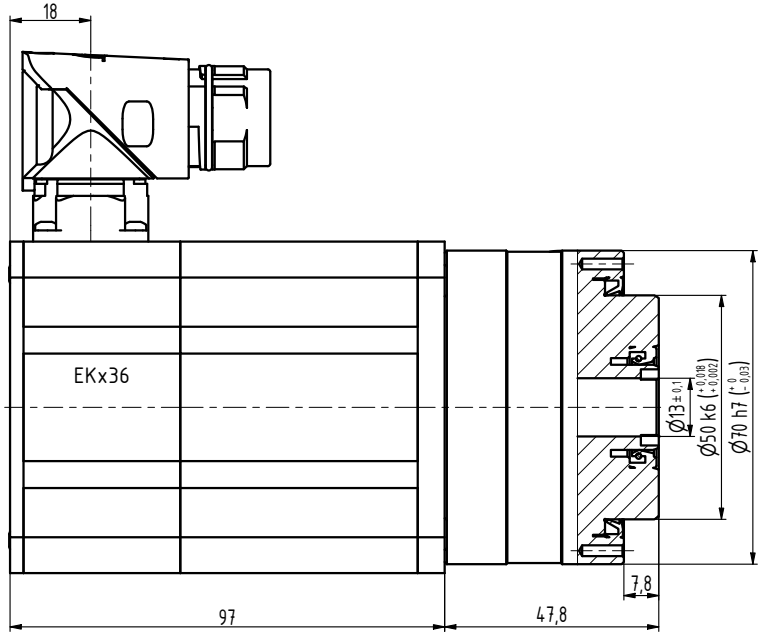

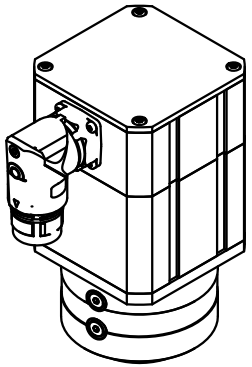

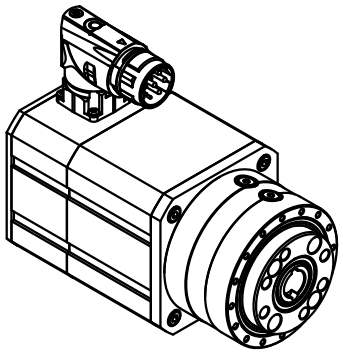

INDEX	ZMĚNA	DATUM	PODPIS		
ZN.MAT.			T.O.	HMOTNOST kg	MĚŘ.
ROZM.-POLOT.					
POM. ZAŘ.				ČSN	TŘ.Č.
VYPR. Ošlejšek		NORM.REF.		POZN.	Č. KUSOVNÍKU
PŘEKR. Šimík 27.2.2019					
TECHNOL.		SCHVÁLIL Ošlejšek	28.04.2017	STARÝ V.	Č.V.
NÁZEV					
Motor M3-0080				M3160 05 Z	
				Listů	List