| Engineering motordata (WIN 1217) | | |
|---|---|---|
| DC bus voltage | 560 | V DC |
| Nominal AC voltage | 380 | V AC (rms) |
| Rated voltage | 245 | V AC (rms) |
| Rated power | 358 | W |
| Rated speed | 4500 | rpm |
| Rated torque | 0.76 | Nm |
| Rated current | 1.15 | A (rms) |
| Peak torque | 2.4 | Nm |
| Peak current | 4.3 | A (rms) |
| Stall torque | 0.95 | Nm |
| Stall current | 1.17 | A (rms) |
| No load speed | 7690 | rpm |
| EMF constant ±10% | 49 | V AC (rms) / 1000rpm |
| Theoretical torque constant ±10% | 0.81 | Nm / A (rms) |
| Torque constant ±10% @ rated load | 0.66 | Nm / A (rms) |
| Number of poles | 10 | |
| Electrical time constant | 1.97 | ms |
| Winding terminal resistance | 17.255 | Ω |
| Rotary field terminal inductance | 34 | mH |

| Customs info | |
|---|---|
| HS Code | 85015100 |

| Mechanical motor data (setting 48) | | |
|---|---|---|
| Max mechanical speed | 12000 | rpm |
| Mech. time constant | 2.27 | ms |
| Thermal time constant | 25 | min |
| Rotor inertia | 0.5 | kgcm² |
| Protection | IP64 | |
| Color | RAL 9005 | |
| Cooling | Convection | |
| Motor-only mass | 2.5 | kg |

| Sensors | |
|---|---|
| Temperature | PT1000 {PT1000} |
| Feedback | EDM35 (HDSL) multi-turn, 20+12 bits |

| Gearbox engineering data | | |
|---|---|---|
| Gear ratio | 75 | |
| Efficiency* | 70 | % |
| Torsional stiffness | 8 | Nm/arcmin |
| Rated output torque | 50 | Nm |
| Max output torque | 125 | Nm |
| Rated input speed | 2000 | rpm |
| Max input speed | 5000 | rpm |
| Operating temperature | <-25; 50> | °C |
| Max. backlash | < 0.5 | arcmin |
| Service life | 6000 | h |

** at rated speed & torque*

| Lubrication | |
|---|---|
| Type | Standard |
| Lubricant | Mobil SHC150 |

| Gearbox mechanical data | | |
|---|---|---|
| Max. radial force | 2800 | N |
| Max. axial force | 4100 | N |
| Output shaft design | Flange | |
| Mass | 1.35 | kg |
| Input inertia | 0.061 | kgcm² |
| Protection | IP64 | |

| Actuator data | | |
|---|---|---|
| Rated speed | 27 | rpm |
| Rated torque | 45.44 | Nm |
| Peak torque | 125.00 | Nm |
| EMF constant ±10% | 3675.0 | V AC (rms) / 1000rpm |
| Torque constant ±10% @ rated load | 34.70 | Nm / A (rms) |
| Total mass | 3.85 | kg |
| Output inertia | 3155.6 | kgcm² |

Torque / speed curve

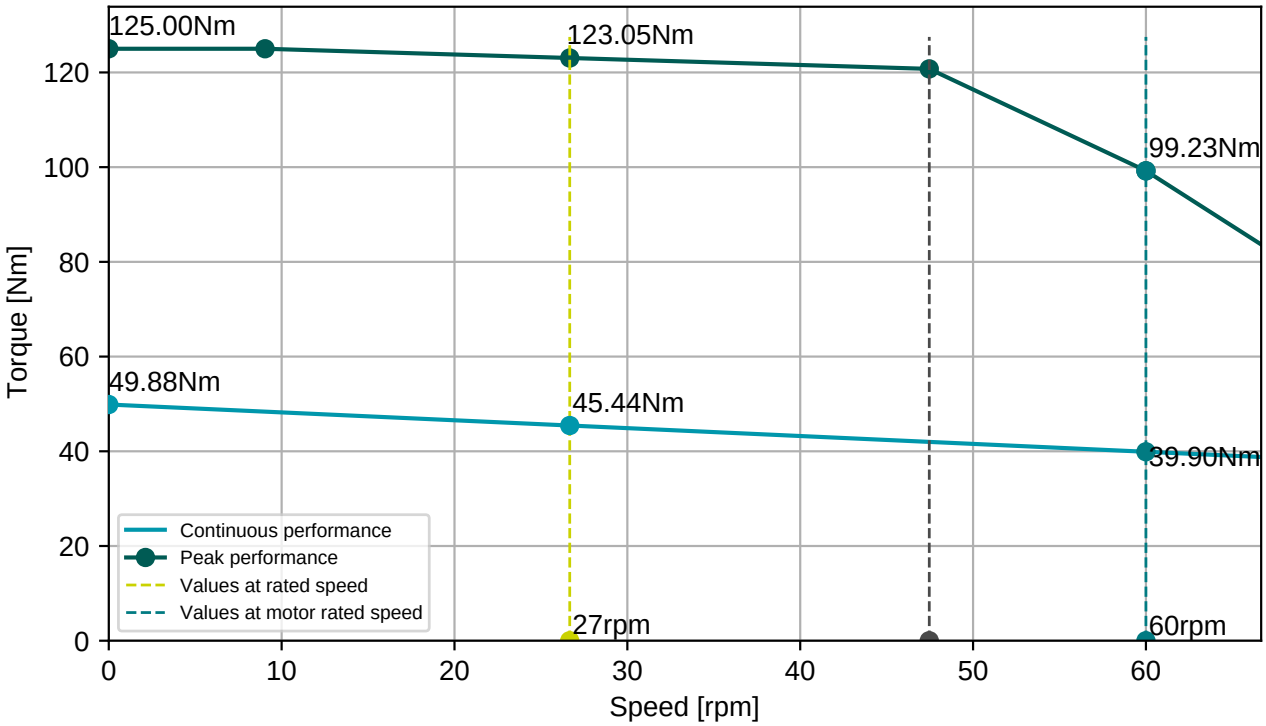


**BGC110N00001216000**

M23, 8 poles, rotary

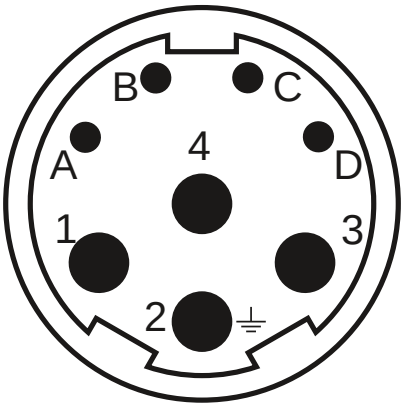


| Connector 1 (283) | |
|---|---|
| **1** | U |
| **4** | V |
| **3** | W |
| **2** | PE |
| **A** | Brake+ |
| **B** | Brake- |
| **C** | GND/DSL- |
| **D** | +Us/DSL+ |

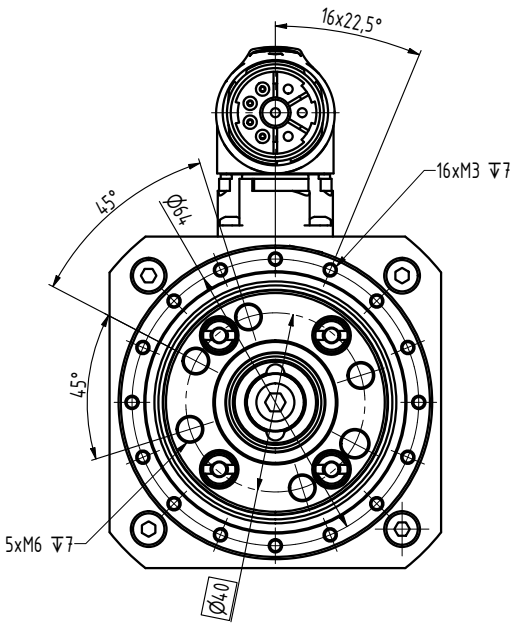


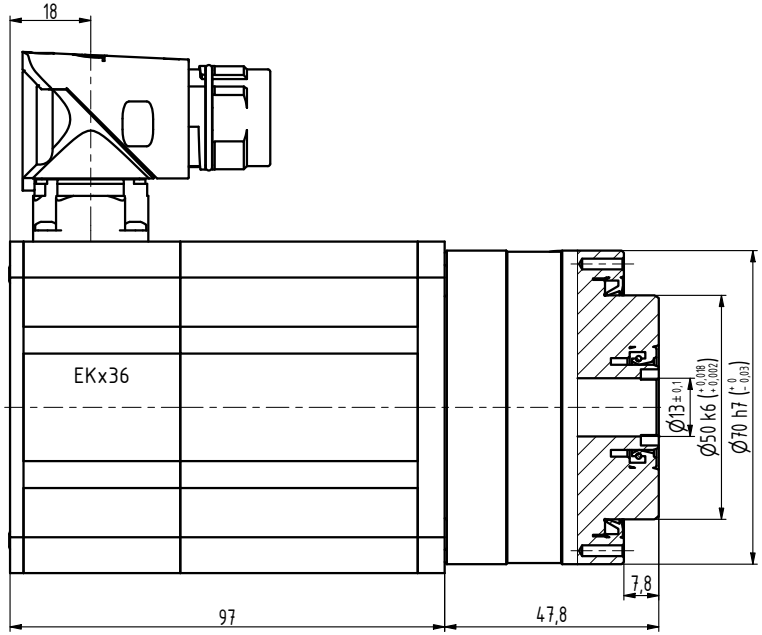


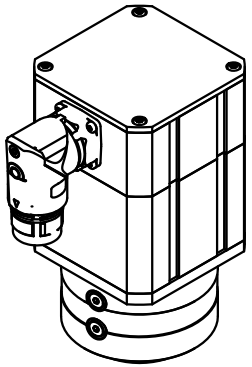

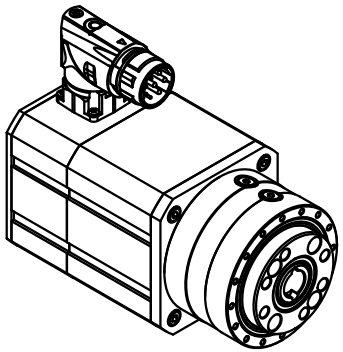

| INDEX | ZMĚNA | DATUM | PODPIS | | |
|---|---|---|---|---|---|
| ZN.MAT. | | | T.O. | HMOTNOST kg | MĚŘ. |
| ROZM.-POLOT. | | | | | |
| POM. ZAŘ. | | | | ČSN | TŘ.Č. |
| VYPR. Ošlejšek | | NORM.REF. | | POZN. | Č. KUSOVNÍKU |
| PŘEKR. Šimík 27.2.2019 | | | | | |
| TECHNOL. | | SCHVÁLIL Ošlejšek | 28.04.2017 | STARÝ V. | Č.V. |
| NÁZEV | | | | | |
| Motor M3-0080 | | | | M3160 05 Z | |
| | | | | Listů | List |