Engineering motordata (WIN 1336)		
DC bus voltage	320	V DC
Nominal AC voltage	220	V AC (rms)
Rated voltage	170	V AC (rms)
Rated power	358	W
Rated speed	4500	rpm
Rated torque	0.76	Nm
Rated current	1.66	A (rms)
Peak torque	2.4	Nm
Peak current	6.2	A (rms)
Stall torque	0.95	Nm
Stall current	1.69	A (rms)
No load speed	6410	rpm
EMF constant ±10%	34	V AC (rms) / 1000rpm
Theoretical torque constant ±10%	0.562	Nm / A (rms)
Torque constant ±10% @ rated load	0.458	Nm / A (rms)
Number of poles	10	
Electrical time constant	1.97	ms
Winding terminal resistance	8.391	Ω
Rotary field terminal inductance	16.5	mH

Customs info	
HS Code	85015100

Mechanical motor data (setting 48)		
Max mechanical speed	12000	rpm
Mech. time constant	2.30	ms
Thermal time constant	25	min
Rotor inertia	0.5	kgcm²
Protection	IP64	
Color	RAL 9005	
Cooling	Convection	
Motor-only mass	2.5	kg

Sensors	
Temperature	PT1000 {PT1000}
Feedback	EDM35 (HDSL) multi-turn, 20+12 bits

Gearbox engineering data		
Gear ratio	75	
Efficiency*	70	%
Torsional stiffness	8	Nm/arcmin
Rated output torque	50	Nm
Max output torque	125	Nm
Rated input speed	2000	rpm
Max input speed	5000	rpm
Operating temperature	<-25; 50>	°C
Max. backlash	< 0.5	arcmin
Service life	6000	h

** at rated speed & torque*

Lubrication	
Type	Standard
Lubricant	Mobil SHC150

Gearbox mechanical data		
Max. radial force	2800	N
Max. axial force	4100	N
Output shaft design	Flange	
Mass	1.35	kg
Input inertia	0.061	kgcm²
Protection	IP64	

Actuator data		
Rated speed	27	rpm
Rated torque	45.44	Nm
Peak torque	125.00	Nm
EMF constant ±10%	2550.0	V AC (rms) / 1000rpm
Torque constant ±10% @ rated load	24.04	Nm / A (rms)
Total mass	3.85	kg
Output inertia	3155.6	kgcm²

Torque / speed curve

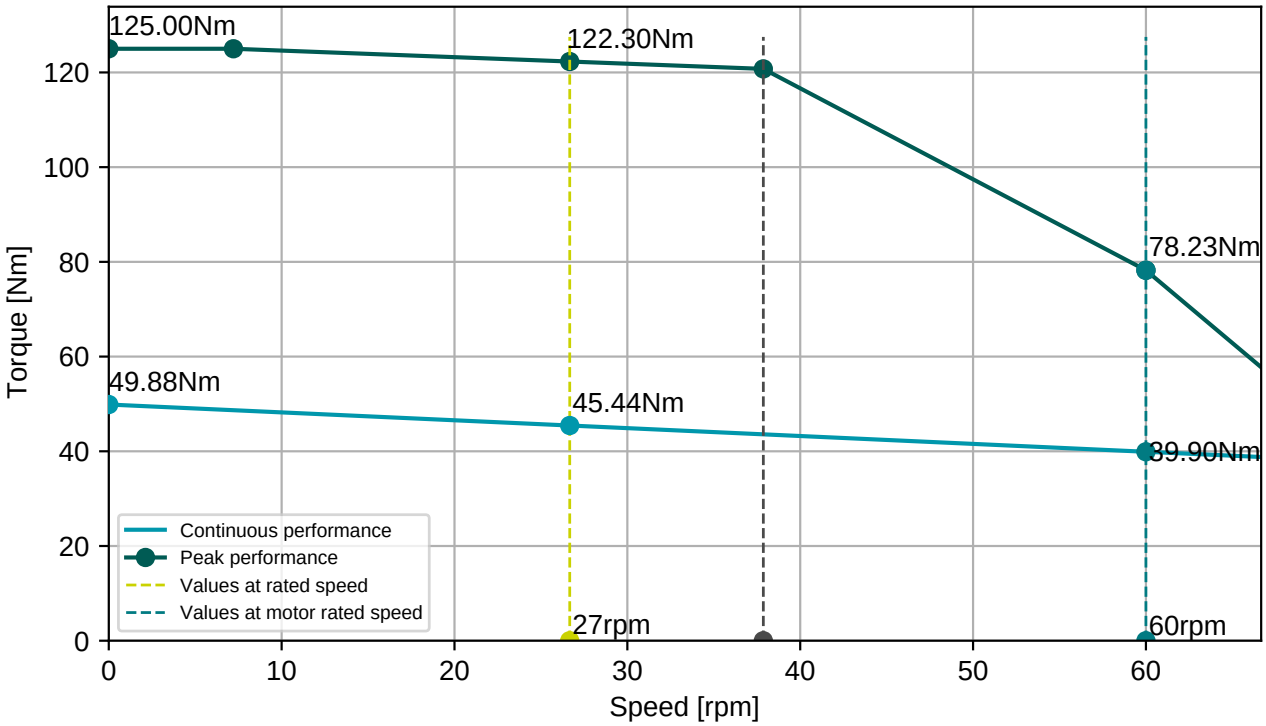

BGC110N00001216000

M23, 8 poles, rotary

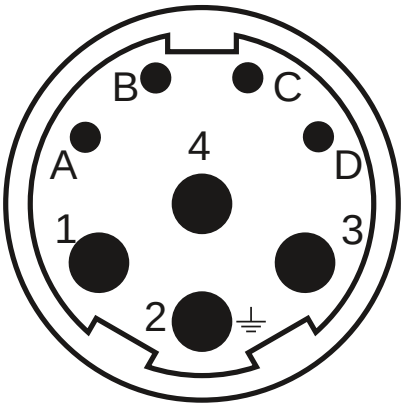

Connector 1 (283)	
1	U
4	V
3	W
2	PE
A	Brake+
B	Brake-
C	GND/DSL-
D	+Us/DSL+

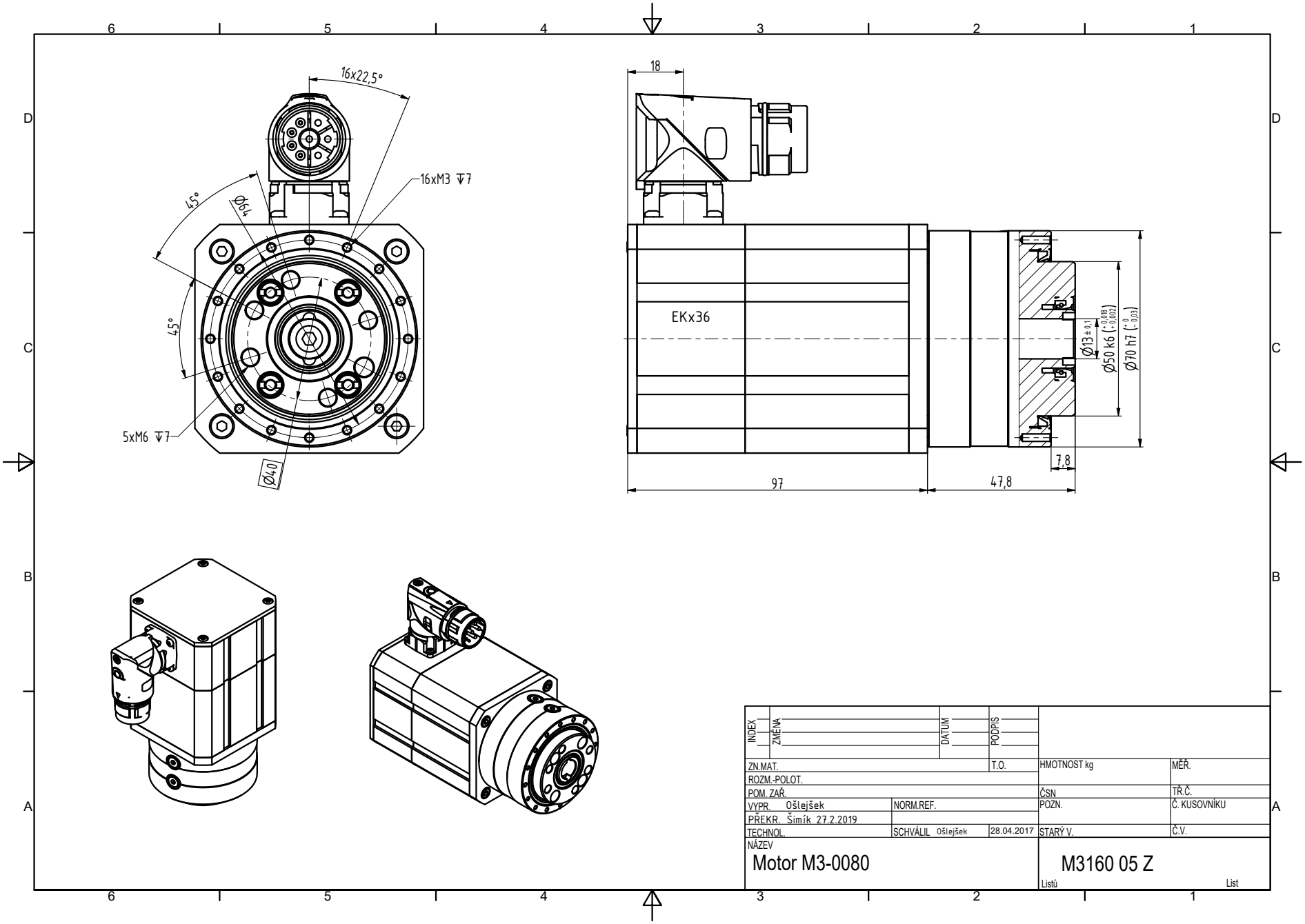
16x22,5°
16xM3 ↧7
45°
Ø64
45°
5xM6 ↧7
Ø40
18
EKx36
Ø13±0,1
Ø50 k6 (+0,018 +0,002)
Ø70 h7 (0 -0,03)
7,8
97
47,8
INDEX
ZMĚNA
DATUM
PODPIS
ZN.MAT.
T.O.
HMOTNOST kg
MĚŘ.
ROZM.-POLOT.
POM. ZAŘ.
ČSN
TŘ.Č.
VYPR. Ošlejšek
NORM.REF.
POZN.
Č. KUSOVNÍKU
PŘEKR. Šimík 27.2.2019
TECHNOL.
SCHVÁLIL Ošlejšek
28.04.2017
STARÝ V.
Č.V.
NÁZEV
Motor M3-0080
M3160 05 Z
Listů
List