Engineering data (WIN 712)		
DC bus voltage	320	V DC
Nominal AC voltage	220	V AC (rms)
Rated voltage	161	V AC (rms)
Rated power	2.4	kW
Rated speed	3000	rpm
Rated torque	7.70	Nm
Rated current	10.84	A (rms)
Peak torque	28.8	Nm
Peak current	49.2	A (rms)
Stall torque	9.6	Nm
Stall current	10.7	A (rms)
No load speed	4060	rpm
EMF constant ±10%	54	V AC (rms) / 1000rpm
Theoretical torque constant ±10%	0.89	Nm / A (rms)
Torque constant ±10% @ rated load	0.71	Nm / A (rms)
Number of poles	10	
Electrical time constant	6.10	ms
Winding terminal resistance	0.59	Ω
Rotary field terminal inductance	3.6	mH

Customs info	
HS Code	85015220

Mechanical data (setting 29)		
Max mechanical speed	9000	rpm
Mech. time constant	0.58	ms
Thermal time constant	35	min
Rotor inertia	4.49	kgcm²
Protection	IP64	
Color	RAL 9005	
Cooling	Convection	
Motor-only mass	6.4	kg
Max. axial force 20kh	131	N
Max. radial force 20kh*	689	N
Max. axial force 100kh	77	N
Max. radial force 100kh*	403	N

** Defined for point of action at ½ output shaft length*

Sensors	
Temperature	PT1000 {PT1000}
Feedback	EQI1131 (EnDat 2.2) multi-turn, 19 + 12 bits

Torque / speed curve

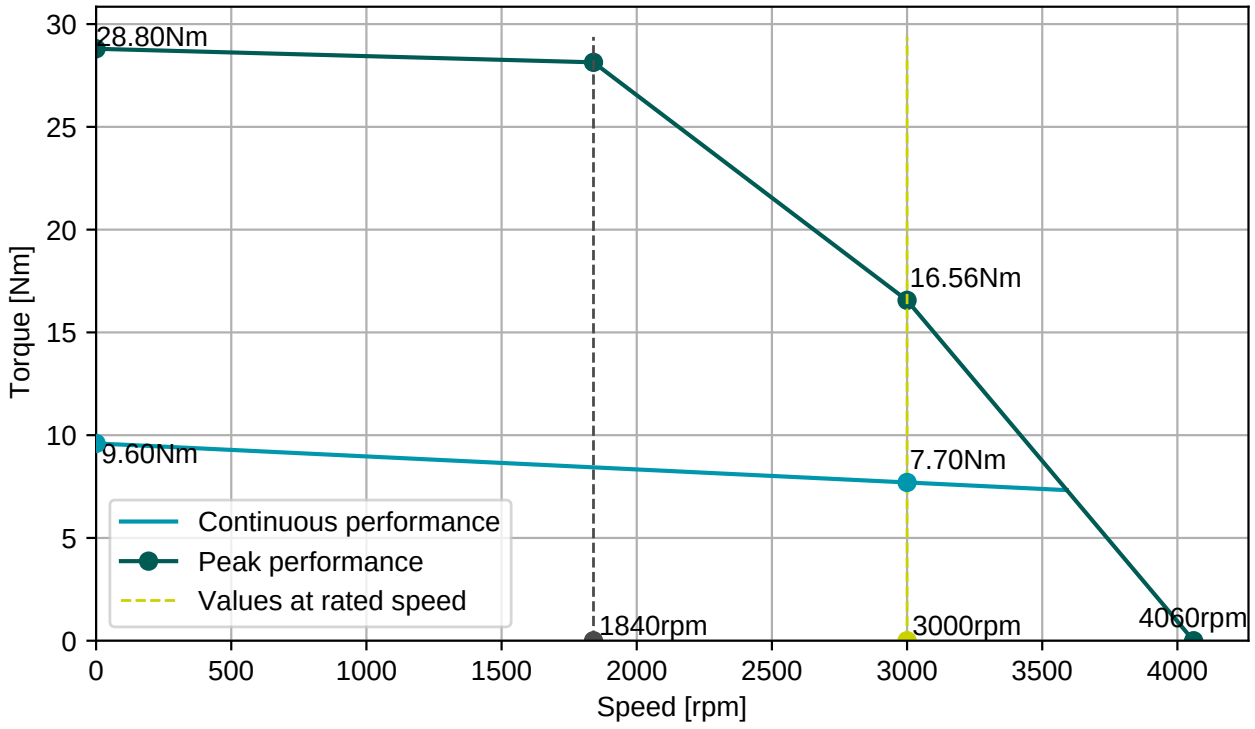

BGC110N00001216000
M23, 8 poles, rotary

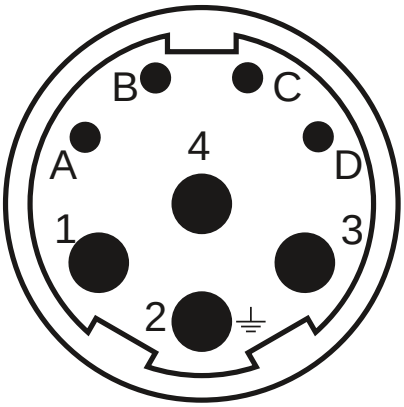

AGC052N00001215000
M23, 12 poles, rotary

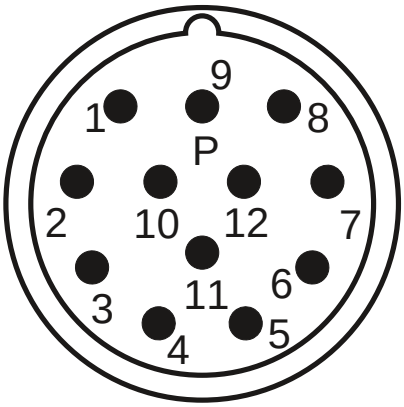

Connector 1 (9)	
1	U
4	V
3	W
2	PE
A	Brake+
B	Brake-
C	
D	

Connector 2 (293)	
1	Vcc (+5V)
2	GND
3	DATA
4	DATA-
5	CLOCK
6	CLOCK-
7	Therm+
8	Therm-
9	Vcc sensor
10	GND sensor

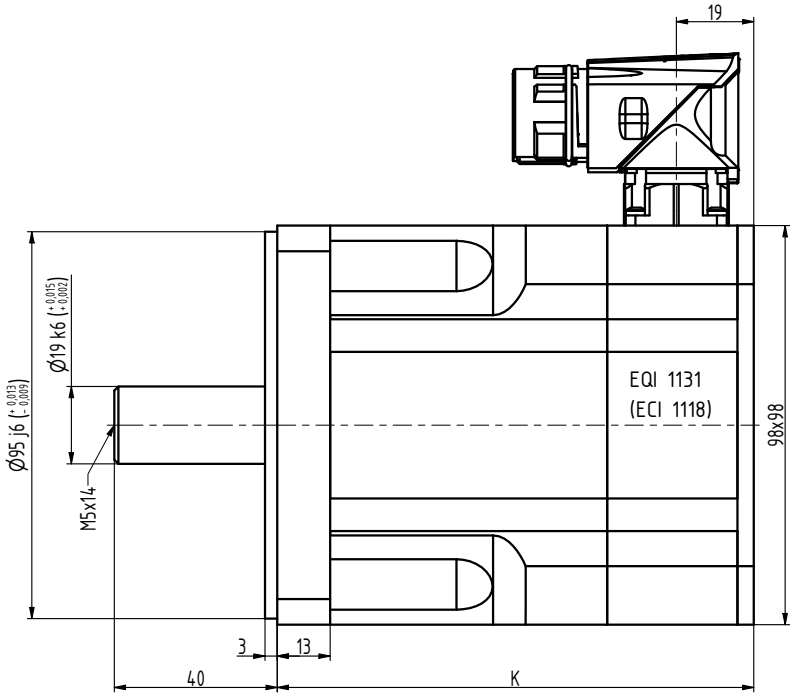

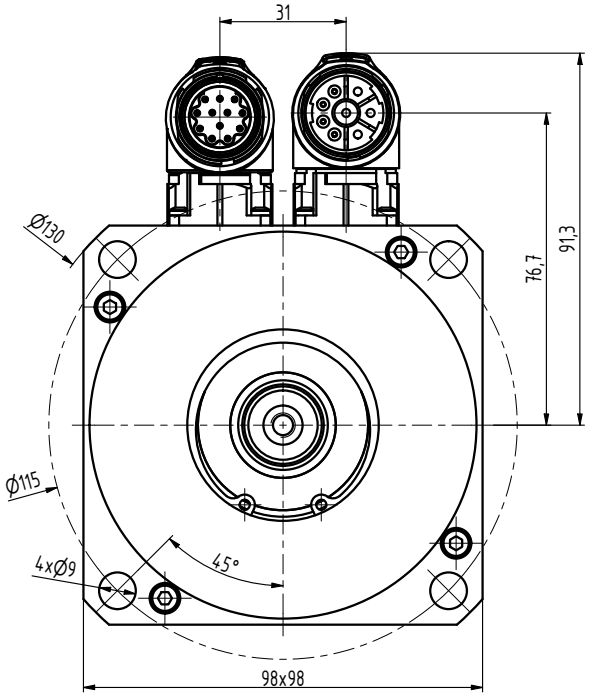

TYP	K
N4-0340	102
N4-0510	117
N4-0750	147
N4-0960	177
N4-1130	207

INDEX	ZMĚNA	DATUM	PODPIS		
ZN.MAT.			T.O.	HMOTNOST kg	MĚŘ.
ROZM.-POLOT.					
POM. ZAŘ.				ČSN	TŘ.Č.
VYPR. Ošlejšek		NORM.REF.		POZN.	Č. KUSOVNÍKU
PŘEKR.					
TECHNOL.		SCHVÁLIL Ošlejšek	26.05.2023	STARÝ V.	Č.V.
NÁZEV	Motor N4			N4163 01 Z_S4_S1	
				Listů	List