Engineering data (WIN 783)		
DC bus voltage	36	V DC
Nominal AC voltage	25	V AC (rms)
Rated voltage	18	V AC (rms)
Rated power	209	W
Rated speed	1000	rpm
Rated torque	2.00	Nm
Rated current	11.02	A (rms)
Peak torque	6.15	Nm
Peak current	41.9	A (rms)
Stall torque	2.05	Nm
Stall current	10.3	A (rms)
No load speed	2060	rpm
EMF constant ±10%	12	V AC (rms) / 1000rpm
Theoretical torque constant ±10%	0.2	Nm / A (rms)
Torque constant ±10% @ rated load	0.2	Nm / A (rms)
Number of poles	10	
Electrical time constant	2.44	ms
Winding terminal resistance	0.41	Ω
Rotary field terminal inductance	1	mH

Customs info	
HS Code	85015100

Mechanical data (setting 29)		
Max mechanical speed	12000	rpm
Mech. time constant	0.99	ms
Thermal time constant	23	min
Rotor inertia	0.55	kgcm²
Protection	IP64	
Color	RAL 9005	
Cooling	Convection	
Motor-only mass	2.5	kg
Max. axial force 20kh	92	N
Max. radial force 20kh*	484	N
Max. axial force 100kh	54	N
Max. radial force 100kh*	283	N

** Defined for point of action at ½ output shaft length*

Sensors	
Temperature	PT1000 {PT1000}
Feedback	EQI1131 (EnDat 2.2) multi-turn, 19 + 12 bits

Brake		
Braking torque	4.50	Nm
Voltage	24	V DC
Power @20°C	12.0	W
Current @20°C	0.50	A
Inertia	0.20	kgcm²
Mass	0.47	kg

Torque / speed curve

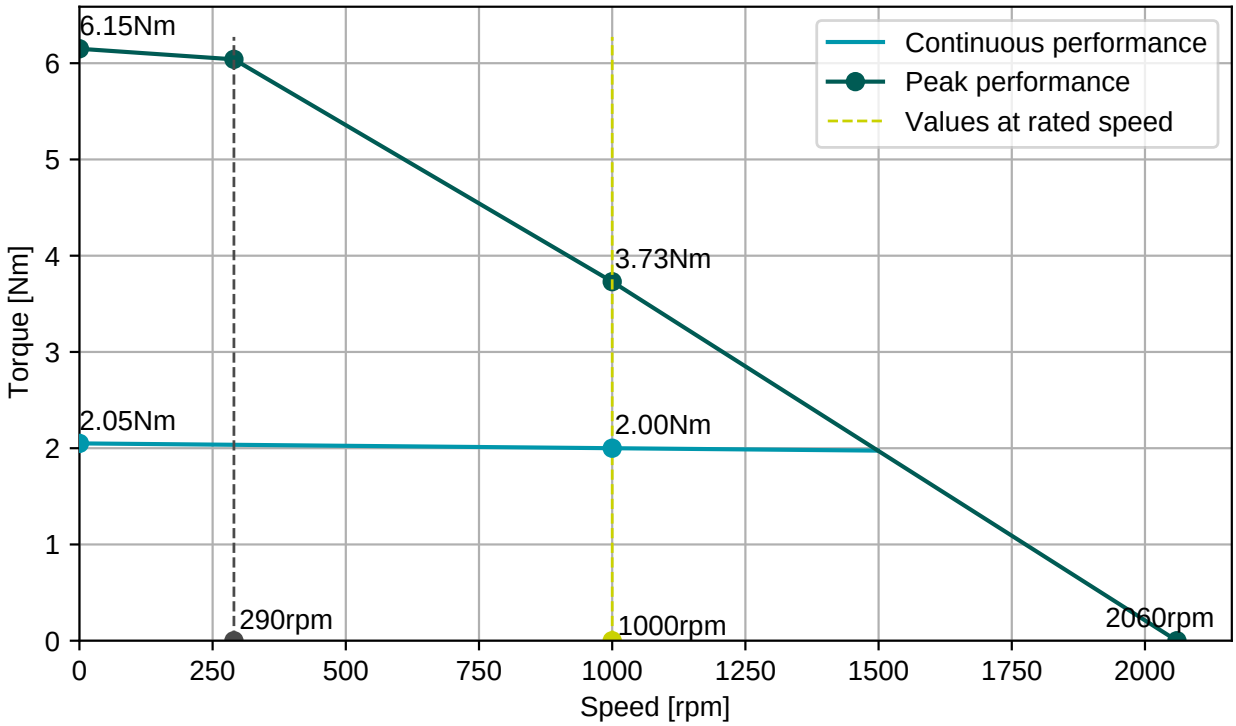

BGC110N00001216000
M23, 8 poles, rotary

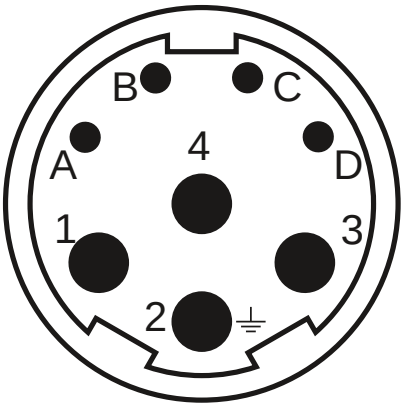

AGC052N00001215000
M23, 12 poles, rotary

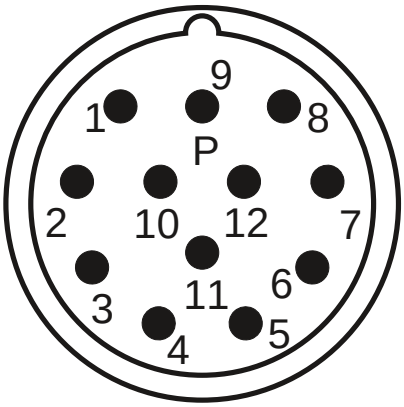

Connector 1 (9)	
1	U
4	V
3	W
2	PE
A	Brake+
B	Brake-
C	
D	

Connector 2 (293)	
1	Vcc (+5V)
2	GND
3	DATA
4	DATA-
5	CLOCK
6	CLOCK-
7	Therm+
8	Therm-
9	Vcc sensor
10	GND sensor

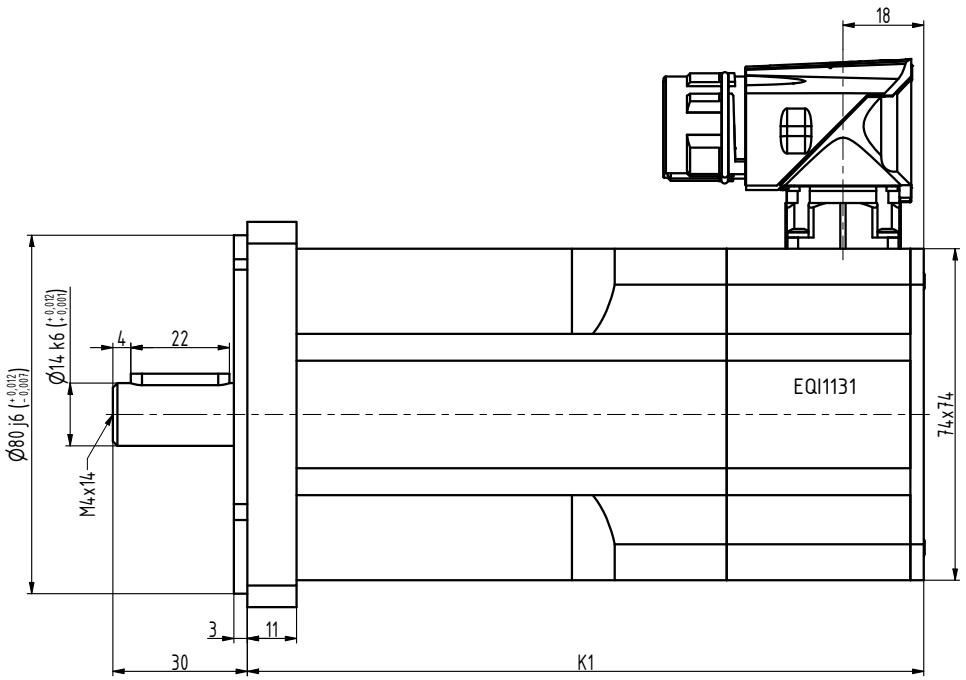

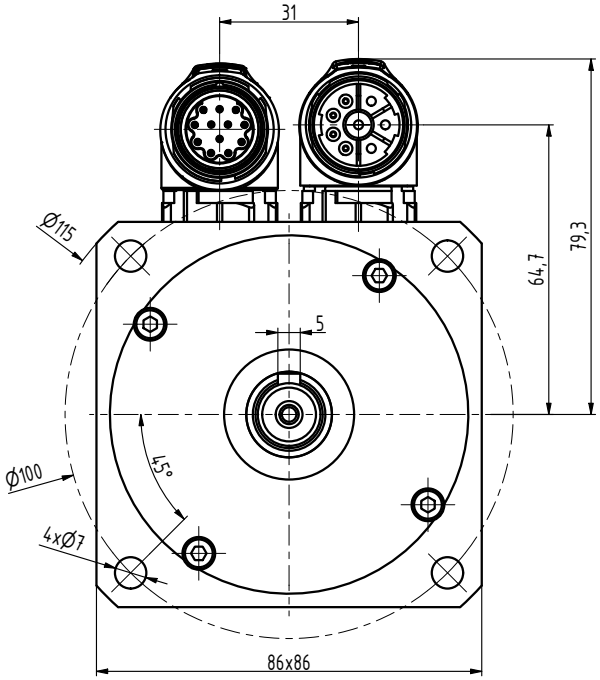

TYP	K1
N3-0115	133
N3-0205	151
N3-0280	169
N3-0350	187
N3-0420	205
N3-0480	223

INDEX	ZMĚNA	DATUM	PODPIS

ZN.MAT.		T.O.	HMOTNOST kg	MĚŘ.	
ROZM.-POLOT.					
POM. ZAŘ.			ČSN	TŘ.Č.	
VYPR. Šimík	NORM.REF.		POZN.	Č. KUSOVNÍKU	
PŘEKR. Ošlejšek 31.05.2021					
TECHNOL.	SCHVÁLIL Ošlejšek	01.11.2018	STARÝ V.	Č.V.	

NÁZEV

Motor N3

N3147 01 BP Z_S4_S1

Listů List