Engineering data (WIN 1068)		
DC bus voltage	560	V DC
Nominal AC voltage	380	V AC (rms)
Rated voltage	308	V AC (rms)
Rated power	7.6	kW
Rated speed	2000	rpm
Rated torque	36.50	Nm
Rated current	17.31	A (rms)
Peak torque	132	Nm
Peak current	63.7	A (rms)
Stall torque	44	Nm
Stall current	17.7	A (rms)
No load speed	2530	rpm
EMF constant ±10%	154	V AC (rms) / 1000rpm
Theoretical torque constant ±10%	2.547	Nm / A (rms)
Torque constant ±10% @ rated load	2.109	Nm / A (rms)
Number of poles	10	
Electrical time constant	14.29	ms
Winding terminal resistance	0.49	Ω
Rotary field terminal inductance	7	mH

Customs info	
HS Code	85015230

Mechanical data (setting 46)		
Max mechanical speed	6000	rpm
Mech. time constant	0.61	ms
Thermal time constant	62	min
Rotor inertia	47	kgcm²
Protection	IP64	
Color	RAL 9005	
Cooling	Convection	
Motor-only mass	30.4	kg
Max. axial force 20kh	164	N
Max. radial force 20kh*	864	N
Max. axial force 100kh	96	N
Max. radial force 100kh*	505	N

** Defined for point of action at ½ output shaft length*

Sensors	
Temperature	PT1000 {PT1000}
Feedback	SKM36 (Hiperface) multi-turn, 128 sin/cos+12bits

Brake		
Braking torque	36.00	Nm
Voltage	24	V DC
Power @20°C	26.0	W
Current @20°C	1.08	A
Inertia	6.20	kgcm²
Mass	2.85	kg

Torque / speed curve

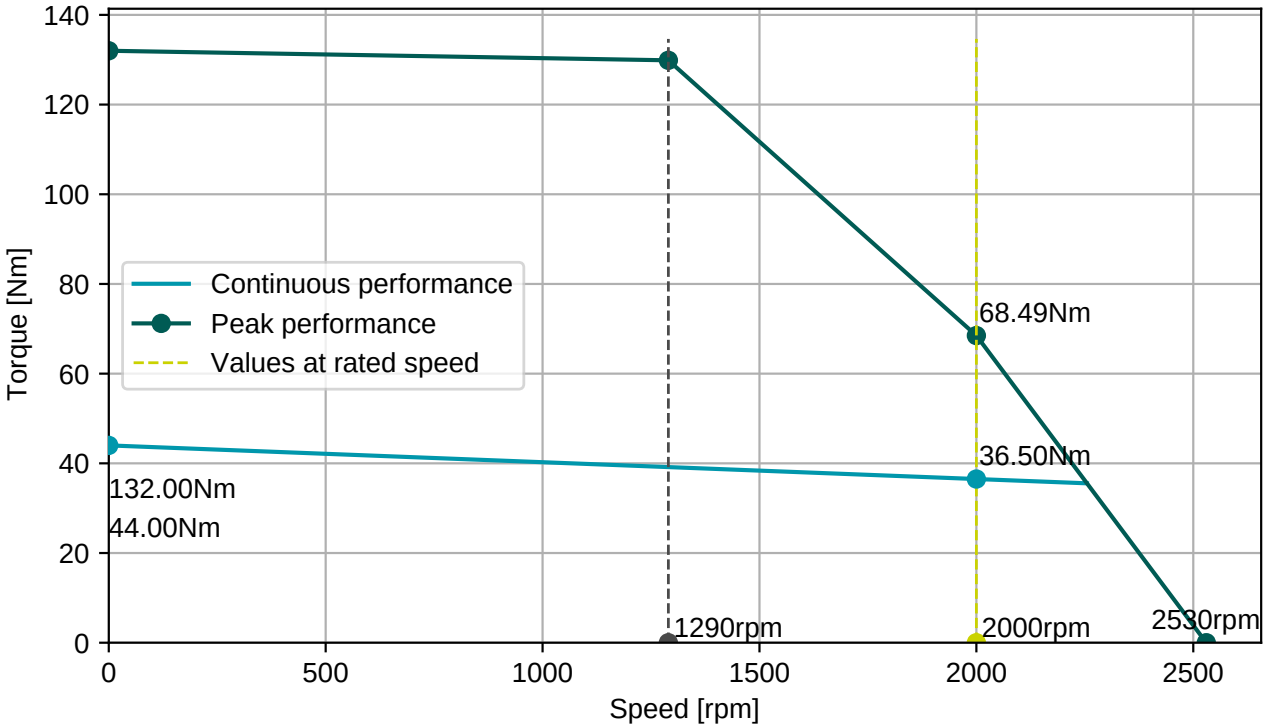

BGC110N00001216000
M23, 8 poles, rotary

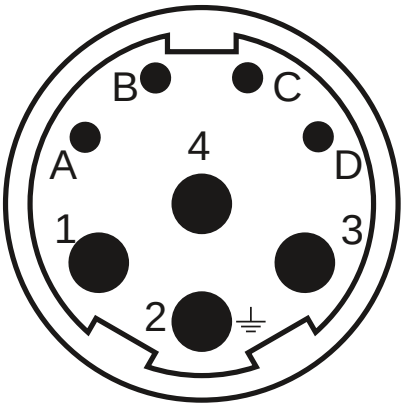

AGC113N00001215000
M23, 17 poles, rotary

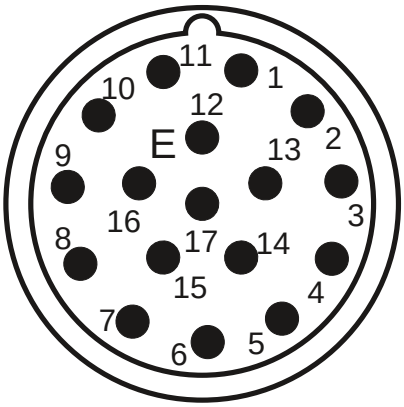

Connector 1 (9)	
1	U
4	V
3	W
2	PE
A	Brake+
B	Brake-
C	
D	

Connector 2 (130)	
1/9	SIN/REFSIN
3/11	COS/REFCOS
5/13	DATA/DATA-
4/2	Us/GND
14/7	Therm

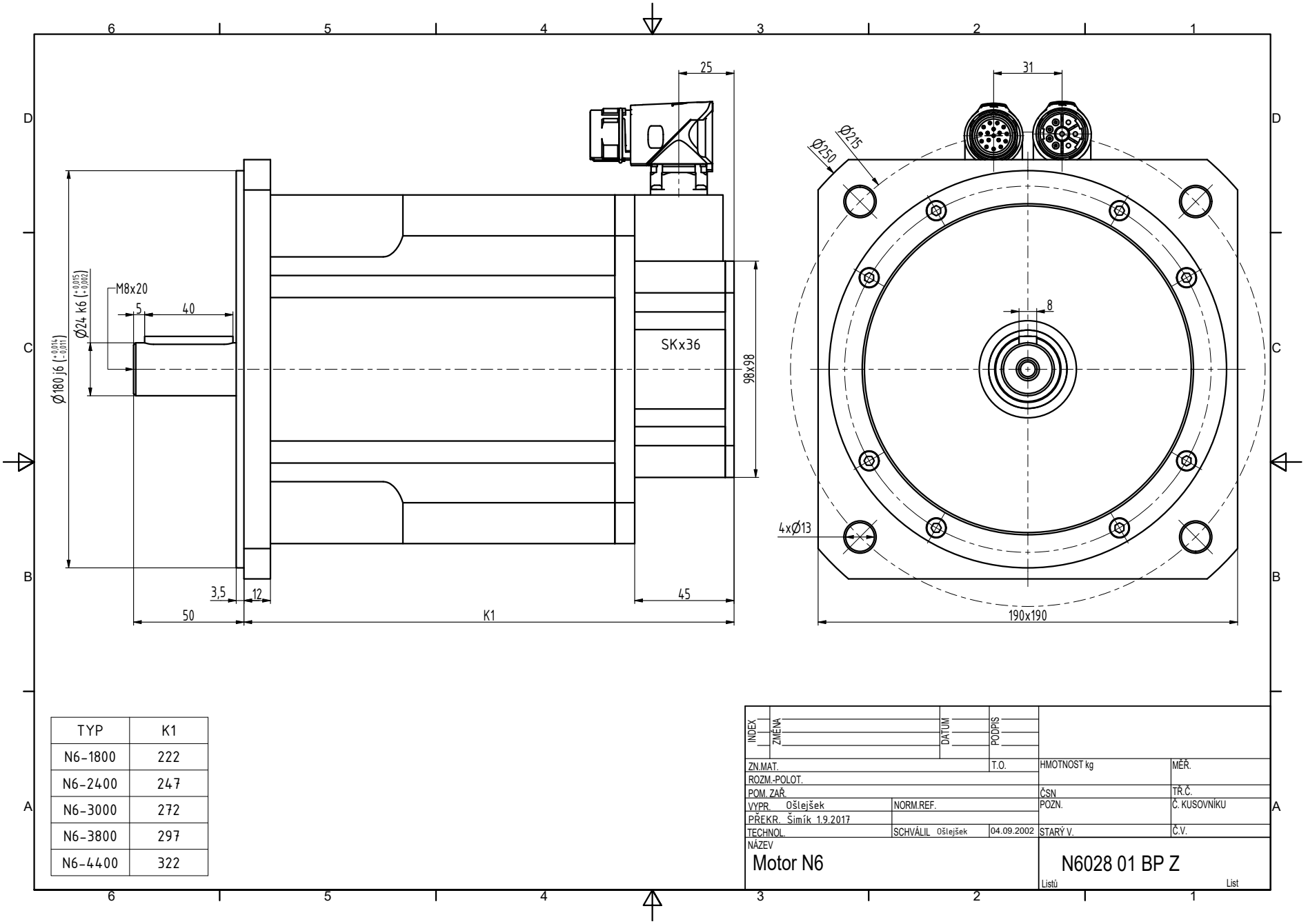

TYP	K1
N6-1800	222
N6-2400	247
N6-3000	272
N6-3800	297
N6-4400	322

INDEX	ZMĚNA	DATUM	PODPIS

ZN.MAT.			T.O.	HMOTNOST kg	MĚŘ.
ROZM.-POLOT.					
POM. ZAŘ.				ČSN	TŘ.Č.
VYPR. Ošlejšek	NORM.REF.			POZN.	Č. KUSOVNÍKU
PŘEKR. Šimík 1.9.2017					
TECHNOL.	SCHVÁLIL Ošlejšek	04.09.2002		STARÝ V.	Č.V.

NÁZEV
Motor N6

N6028 01 BP Z

Listů List