Engineering data (WIN 898)		
DC bus voltage	560	V DC
Nominal AC voltage	380	V AC (rms)
Rated voltage	284	V AC (rms)
Rated power	6.1	kW
Rated speed	2000	rpm
Rated torque	29.00	Nm
Rated current	14.95	A (rms)
Peak torque	114	Nm
Peak current	64.4	A (rms)
Stall torque	38	Nm
Stall current	16.6	A (rms)
No load speed	2750	rpm
EMF constant ±10%	138	V AC (rms) / 1000rpm
Theoretical torque constant ±10%	2.28	Nm / A (rms)
Torque constant ±10% @ rated load	1.94	Nm / A (rms)
Number of poles	10	
Electrical time constant	13.85	ms
Winding terminal resistance	0.52	Ω
Rotary field terminal inductance	7.2	mH

Customs info	
HS Code	85015220

Mechanical data (setting 46)		
Max mechanical speed	6000	rpm
Mech. time constant	0.69	ms
Thermal time constant	57	min
Rotor inertia	39.9	kgcm²
Protection	IP64	
Color	RAL 9005	
Cooling	Convection	
Motor-only mass	24.7	kg
Max. axial force 20kh	162	N
Max. radial force 20kh*	853	N
Max. axial force 100kh	95	N
Max. radial force 100kh*	499	N

** Defined for point of action at ½ output shaft length*

Sensors	
Temperature	PT1000 {PT1000}
Feedback	SKM36 (Hiperface) multi-turn, 128 sin/cos+12bits

Brake		
Braking torque	36.00	Nm
Voltage	24	V DC
Power @20°C	26.0	W
Current @20°C	1.08	A
Inertia	6.20	kgcm²
Mass	2.85	kg

Torque / speed curve

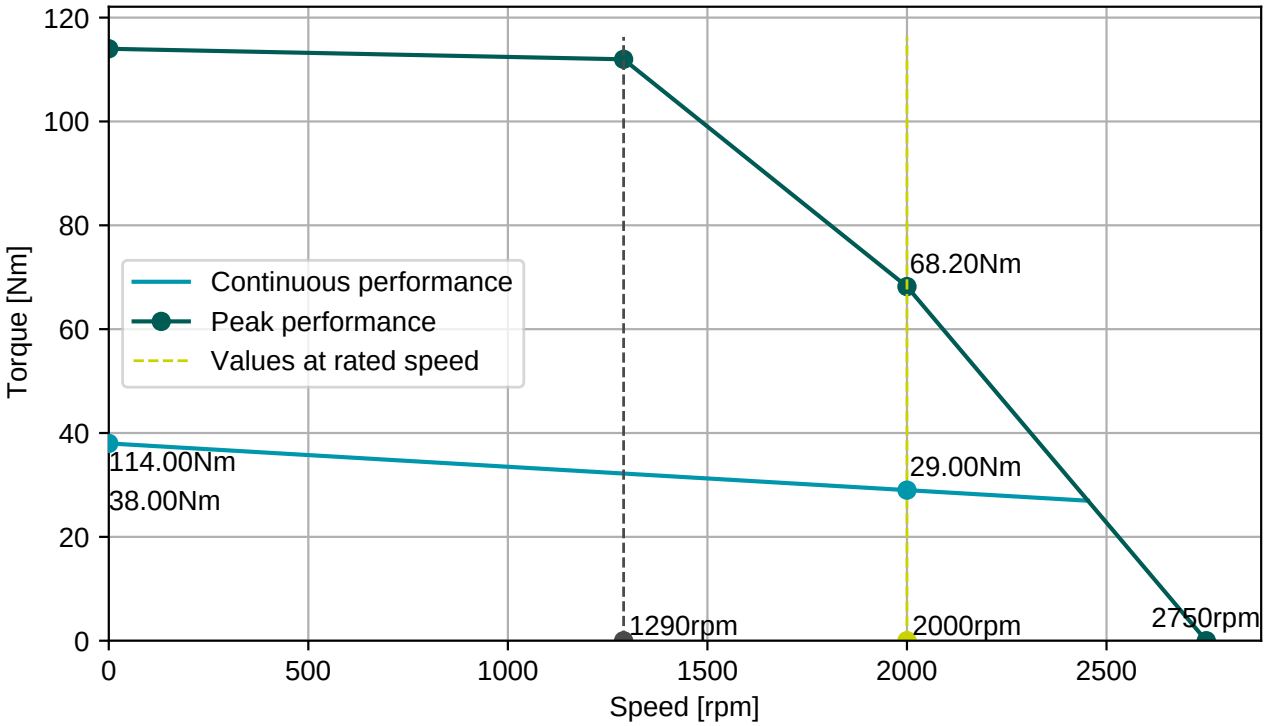

BGC110N00001216000
M23, 8 poles, rotary

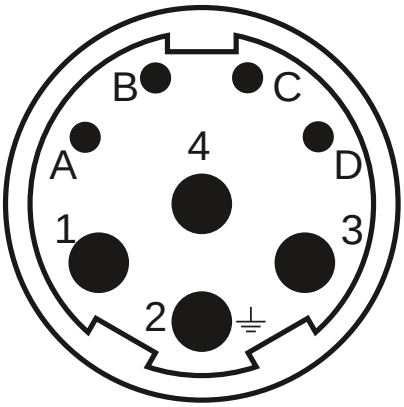

AGC113N00001215000
M23, 17 poles, rotary

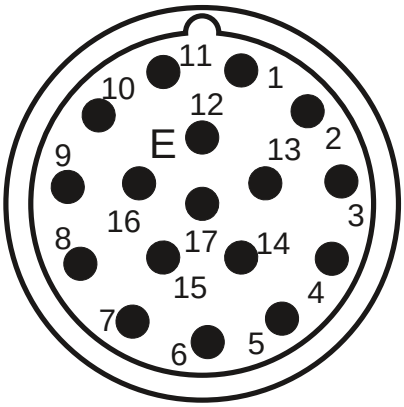

Connector 1 (9)	
1	U
4	V
3	W
2	PE
A	Brake+
B	Brake-
C	
D	

Connector 2 (130)	
1/9	SIN/REFSIN
3/11	COS/REFCOS
5/13	DATA/DATA-
4/2	Us/GND
14/7	Therm

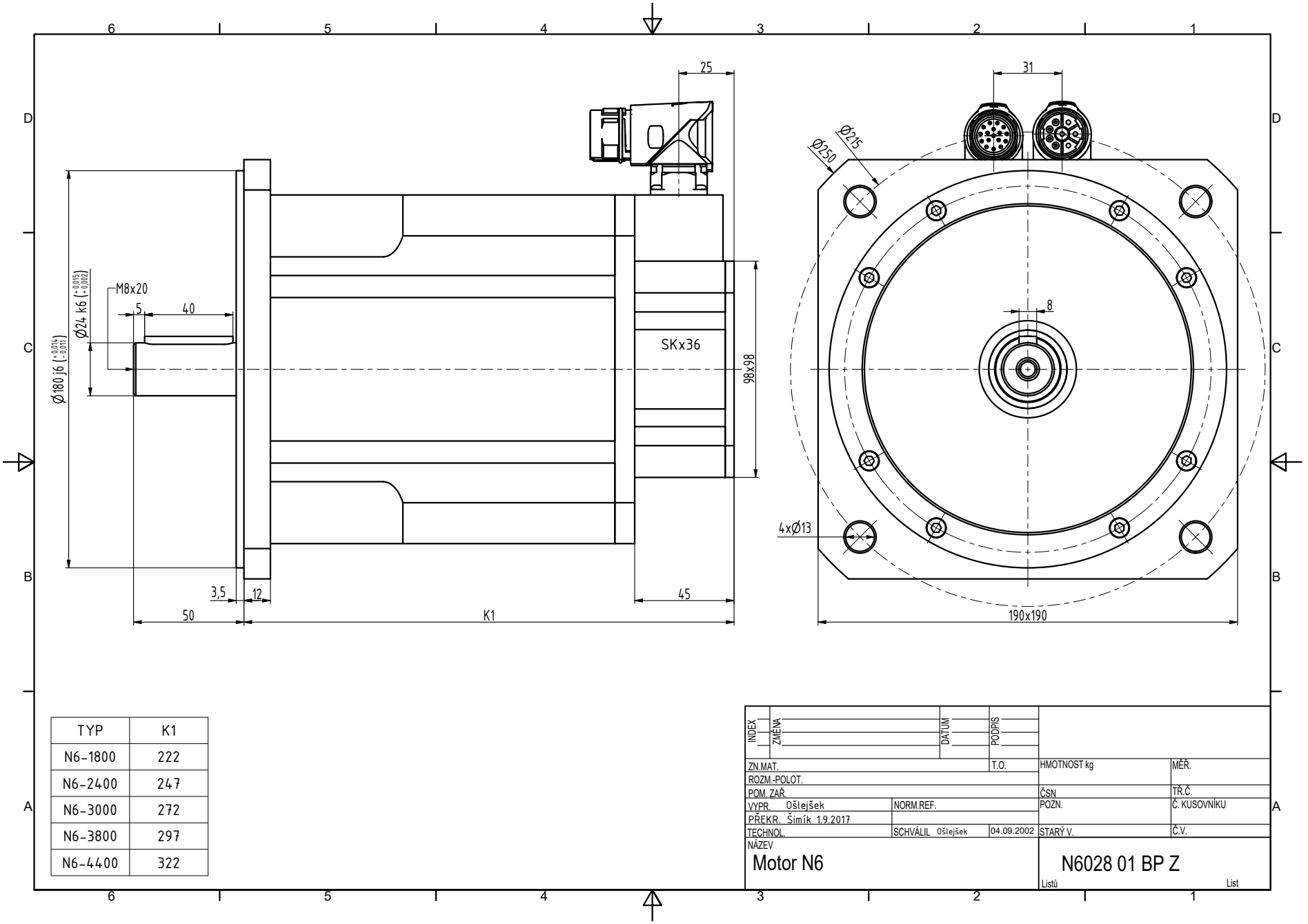

TYP	K1
N6-1800	222
N6-2400	247
N6-3000	272
N6-3800	297
N6-4400	322

INDEX	ZMĚNA	DATUM	PODPIS

ZN.MAT.			T.O.	HMOTNOST kg	MĚŘ.
ROZM.-POLOT.					
POM. ZAŘ.				ČSN	TŘ.Č.
VYPR. Ošlejšek	NORM.REF.			POZN.	Č. KUSOVNÍKU
PŘEKR. Šimík 1.9.2017					
TECHNOL.	SCHVÁLIL Ošlejšek	04.09.2002		STARÝ V.	Č.V.

NÁZEV
Motor N6

N6028 01 BP Z

Listů List