Engineering data (WIN 933)		
DC bus voltage	560	V DC
Nominal AC voltage	380	V AC (rms)
Rated voltage	267	V AC (rms)
Rated power	9.4	kW
Rated speed	3000	rpm
Rated torque	30.00	Nm
Rated current	24.35	A (rms)
Peak torque	132	Nm
Peak current	101.6	A (rms)
Stall torque	44	Nm
Stall current	28.3	A (rms)
No load speed	4040	rpm
EMF constant ±10%	94	V AC (rms) / 1000rpm
Theoretical torque constant ±10%	1.55	Nm / A (rms)
Torque constant ±10% @ rated load	1.23	Nm / A (rms)
Number of poles	10	
Electrical time constant	14.74	ms
Winding terminal resistance	0.19	Ω
Rotary field terminal inductance	2.8	mH

Customs info	
HS Code	85015230

Mechanical data (setting 46)		
Max mechanical speed	6000	rpm
Mech. time constant	0.64	ms
Thermal time constant	62	min
Rotor inertia	47	kgcm²
Protection	IP64	
Color	RAL 9005	
Cooling	Convection	
Motor-only mass	25.9	kg
Max. axial force 20kh	145	N
Max. radial force 20kh*	761	N
Max. axial force 100kh	85	N
Max. radial force 100kh*	445	N

** Defined for point of action at ½ output shaft length*

Sensors	
Temperature	PT1000 {PT1000}
Feedback	SKM36 (Hiperface) multi-turn, 128 sin/cos+12bits

Torque / speed curve

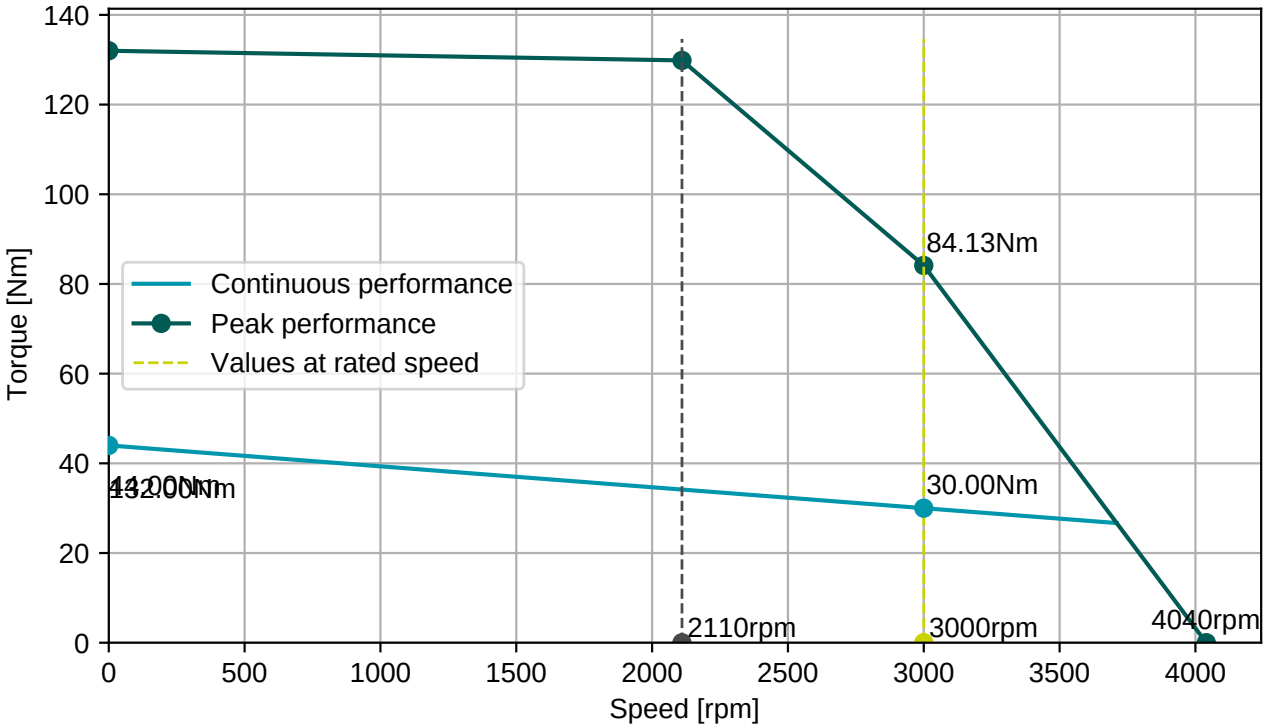

BGC110N00001216000
M23, 8 poles, rotary

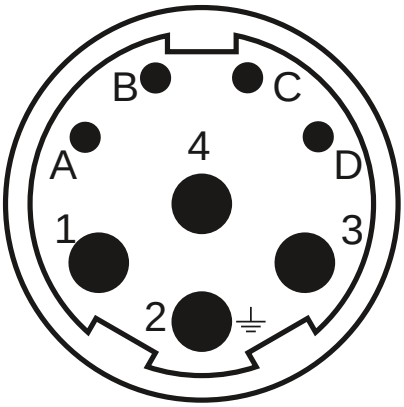

AGC113N00001215000
M23, 17 poles, rotary

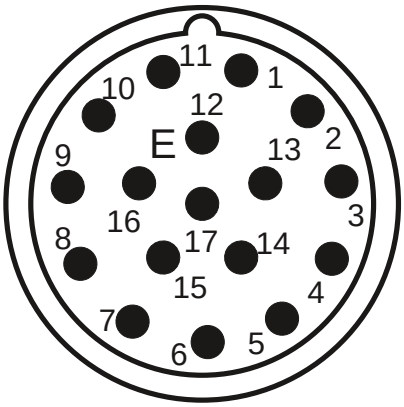

Connector 1 (9)	
1	U
4	V
3	W
2	PE
A	Brake+
B	Brake-
C	
D	

Connector 2 (130)	
1/9	SIN/REFSIN
3/11	COS/REFCOS
5/13	DATA/DATA-
4/2	Us/GND
14/7	Therm

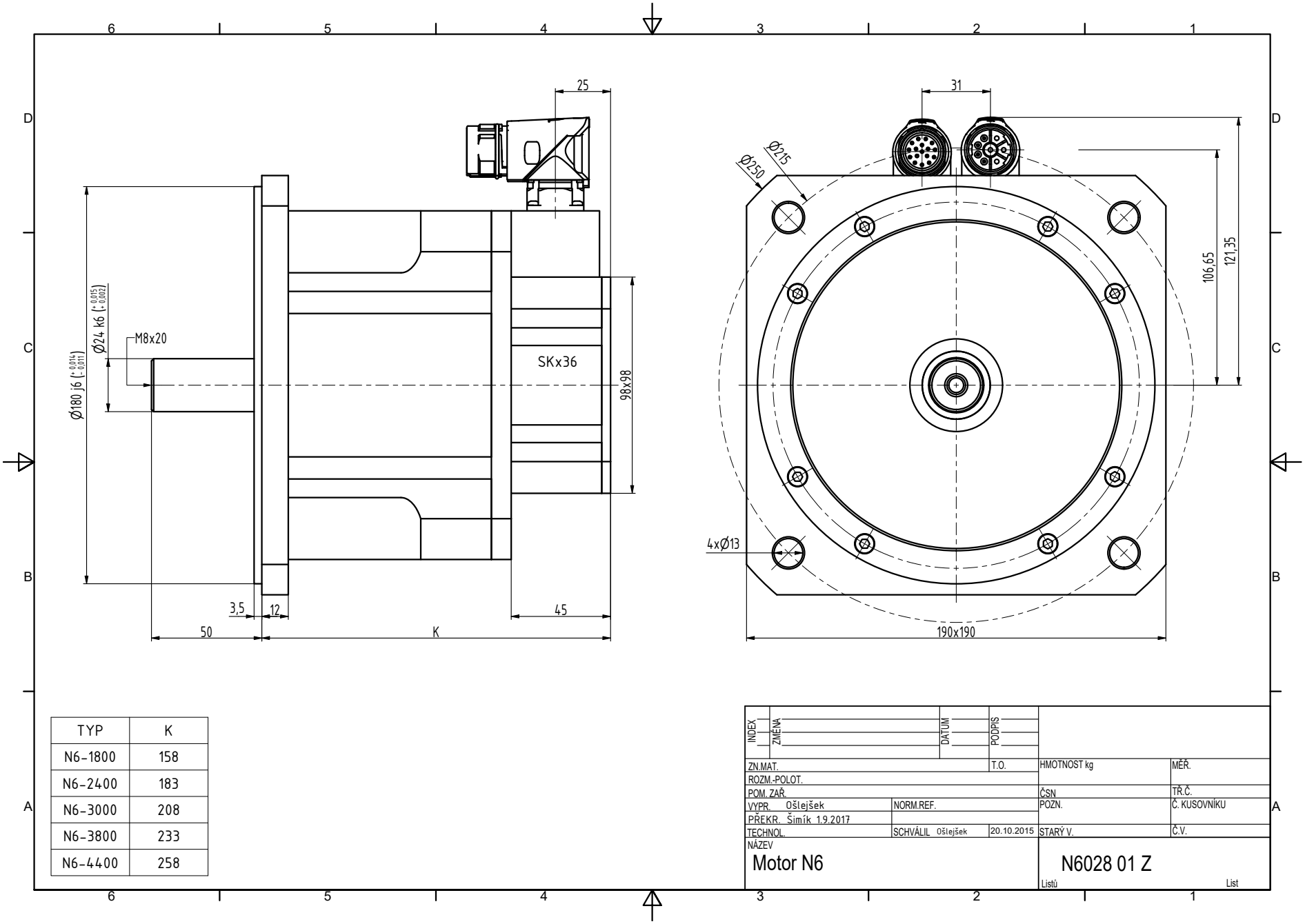

TYP	K
N6-1800	158
N6-2400	183
N6-3000	208
N6-3800	233
N6-4400	258