Engineering data (WIN 816)		
DC bus voltage	560	V DC
Nominal AC voltage	380	V AC (rms)
Rated voltage	266	V AC (rms)
Rated power	2.8	kW
Rated speed	3000	rpm
Rated torque	8.80	Nm
Rated current	7.41	A (rms)
Peak torque	33.9	Nm
Peak current	27.9	A (rms)
Stall torque	11.3	Nm
Stall current	7.5	A (rms)
No load speed	4170	rpm
EMF constant ±10%	91	V AC (rms) / 1000rpm
Theoretical torque constant ±10%	1.51	Nm / A (rms)
Torque constant ±10% @ rated load	1.19	Nm / A (rms)
Number of poles	10	
Electrical time constant	6.27	ms
Winding terminal resistance	1.42	Ω
Rotary field terminal inductance	8.9	mH

Customs info	
HS Code	85015220

Mechanical data (setting 46)		
Max mechanical speed	9000	rpm
Mech. time constant	0.62	ms
Thermal time constant	40	min
Rotor inertia	5.7	kgcm²
Protection	IP64	
Color	RAL 9005	
Cooling	Convection	
Motor-only mass	7.7	kg
Max. axial force 20kh	135	N
Max. radial force 20kh*	713	N
Max. axial force 100kh	79	N
Max. radial force 100kh*	417	N

** Defined for point of action at ½ output shaft length*

Sensors	
Temperature	PT1000 {PT1000}
Feedback	SKS36 (Hiperface) single-turn, 128 sin/cos

Torque / speed curve

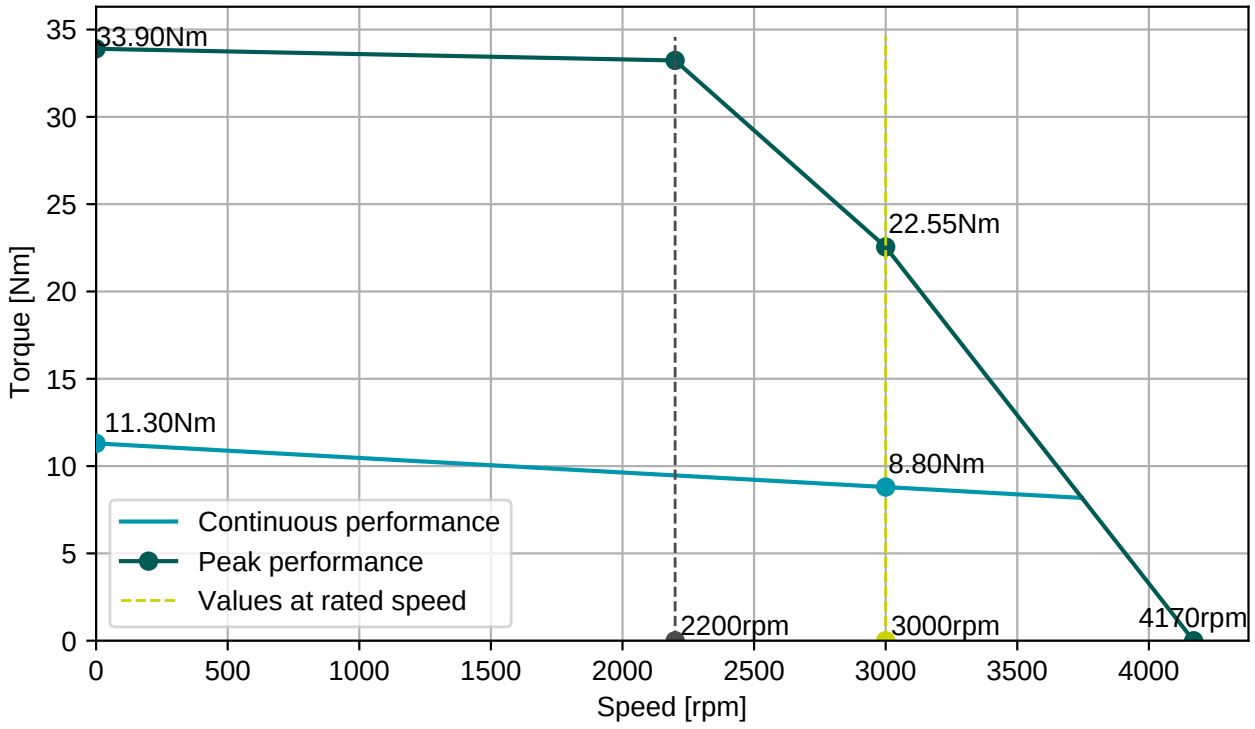

BGC110N00001216000
M23, 8 poles, rotary

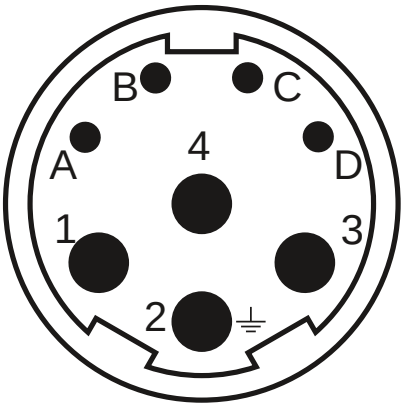

AGC113N00001215000
M23, 17 poles, rotary

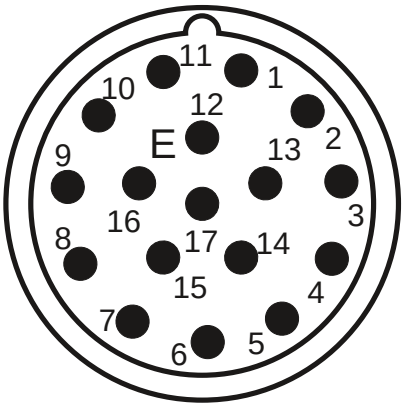

Connector 1 (9)	
1	U
4	V
3	W
2	PE
A	Brake+
B	Brake-
C	
D	

Connector 2 (130)	
1/9	SIN/REFSIN
3/11	COS/REFCOS
5/13	DATA/DATA-
4/2	Us/GND
14/7	Therm

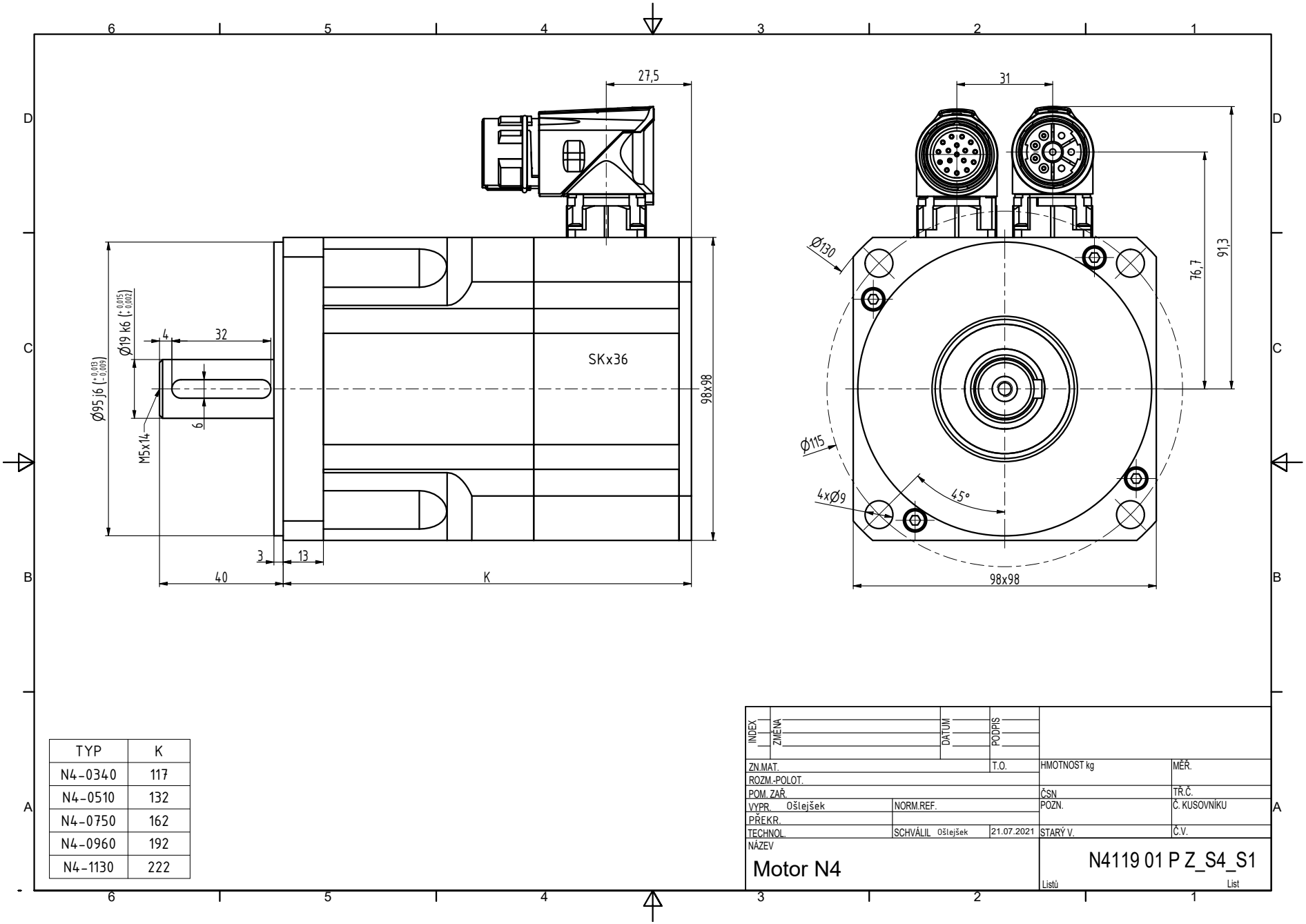

TYP	K
N4-0340	117
N4-0510	132
N4-0750	162
N4-0960	192
N4-1130	222

INDEX	ZMĚNA	DATUM	PODPIS		
ZN.MAT.			T.O.	HMOTNOST kg	MĚŘ.
ROZM.-POLOT.					
POM. ZAŘ.				ČSN	TŘ.Č.
VYPR. Ošlejšek		NORM.REF.		POZN.	Č. KUSOVNÍKU
PŘEKR.					
TECHNOL.		SCHVÁLIL Ošlejšek	21.07.2021	STARÝ V.	Č.V.

NÁZEV

Motor N4

N4119 01 P Z_S4_S1

Listů List