Engineering data (WIN 719)		
DC bus voltage	560	V DC
Nominal AC voltage	380	V AC (rms)
Rated voltage	269	V AC (rms)
Rated power	635	W
Rated speed	6000	rpm
Rated torque	1.01	Nm
Rated current	1.99	A (rms)
Peak torque	3.45	Nm
Peak current	7.8	A (rms)
Stall torque	1.15	Nm
Stall current	1.78	A (rms)
No load speed	9680	rpm
EMF constant ±10%	39	V AC (rms) / 1000rpm
Theoretical torque constant ±10%	0.65	Nm / A (rms)
Torque constant ±10% @ rated load	0.51	Nm / A (rms)
Number of poles	10	
Electrical time constant	2.15	ms
Winding terminal resistance	10.71	Ω
Rotary field terminal inductance	23	mH

Customs info	
HS Code	85015100

Mechanical data (setting 46)		
Max mechanical speed	12000	rpm
Mech. time constant	1.38	ms
Thermal time constant	21	min
Rotor inertia	0.31	kgcm²
Protection	IP64	
Color	RAL 9005	
Cooling	Convection	
Motor-only mass	2	kg
Max. axial force 20kh	45	N
Max. radial force 20kh*	237	N
Max. axial force 100kh	26	N
Max. radial force 100kh*	139	N

** Defined for point of action at ½ output shaft length*

Sensors	
Temperature	PT1000 {PT1000}
Feedback	SKM36 (Hiperface) multi-turn, 128 sin/cos+12bits

Brake		
Braking torque	4.50	Nm
Voltage	24	V DC
Power @20°C	12.0	W
Current @20°C	0.50	A
Inertia	0.20	kgcm²
Mass	0.47	kg

Torque / speed curve

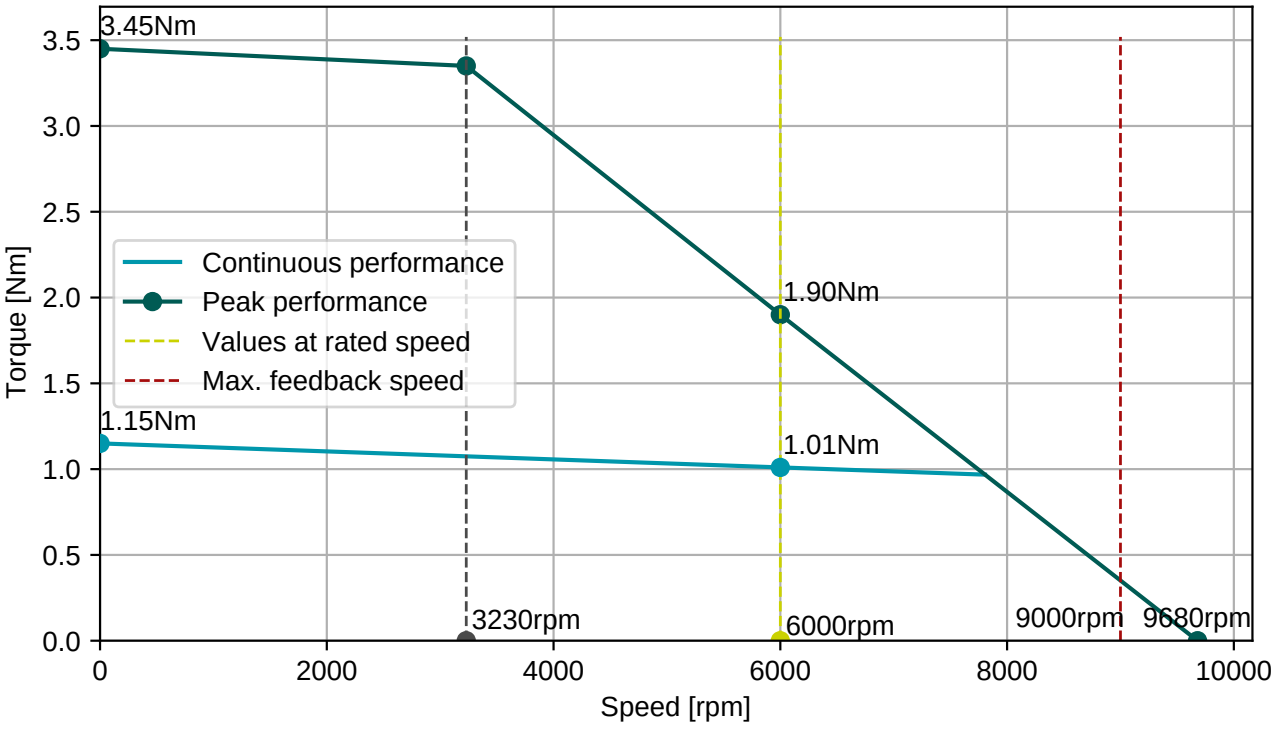

BGC110N00001216000
M23, 8 poles, rotary

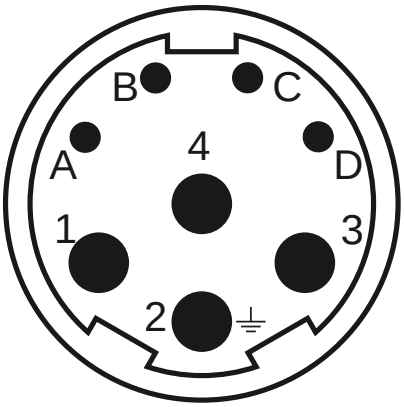

AGC113N00001215000
M23, 17 poles, rotary

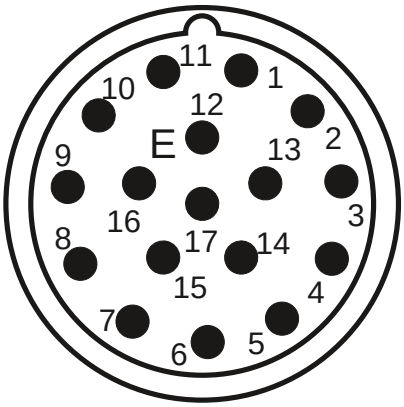

Connector 1 (9)	
1	U
4	V
3	W
2	PE
A	Brake+
B	Brake-
C	
D	

Connector 2 (130)	
1/9	SIN/REFSIN
3/11	COS/REFCOS
5/13	DATA/DATA-
4/2	Us/GND
14/7	Therm

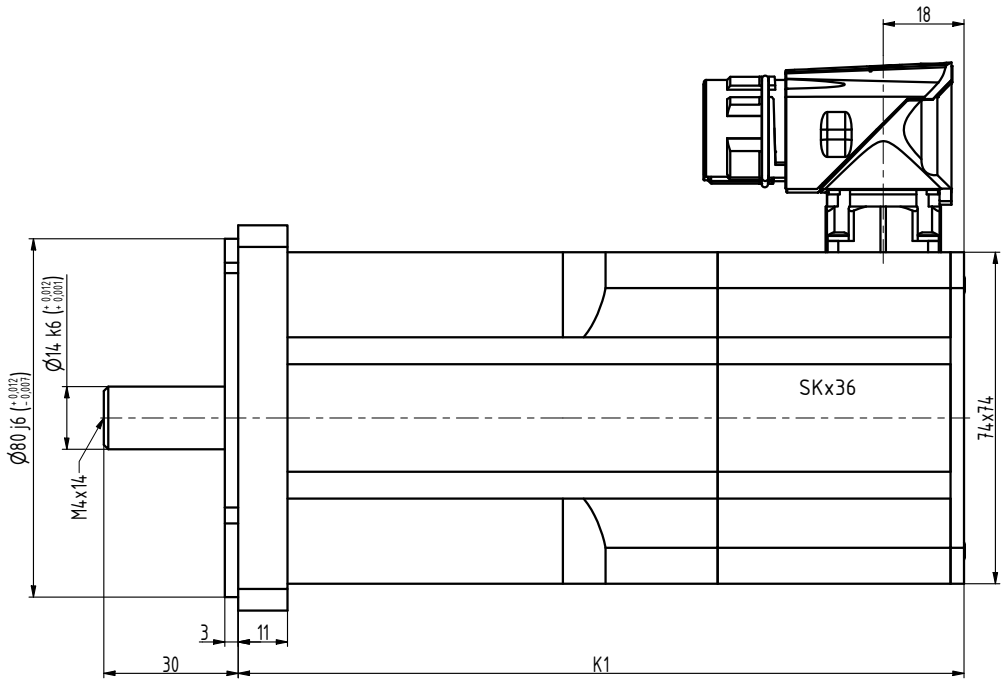

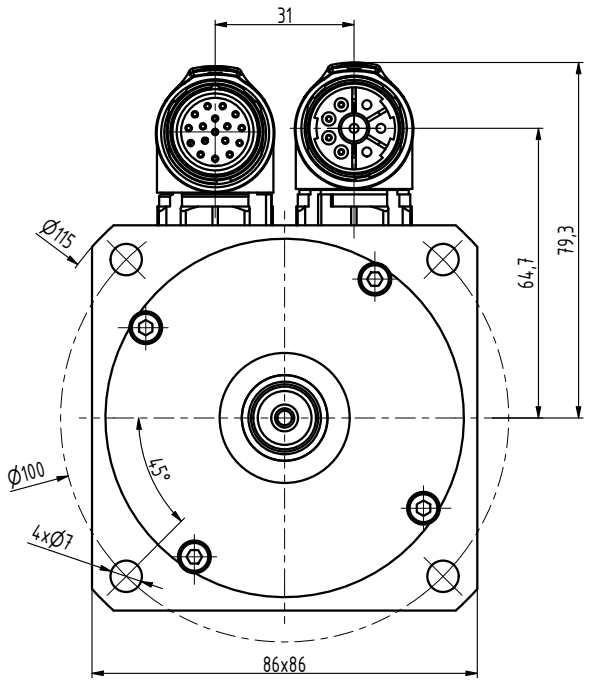

TYP	K1
N3-0115	144
N3-0205	162
N3-0280	180
N3-0350	198
N3-0420	216
N3-0480	234

INDEX	ZMĚNA	DATUM	PODPIS

ZN.MAT.		T.O.	HMOTNOST kg	MĚŘ.
ROZM.-POLOT.				
POM. ZAŘ.			ČSN	TŘ.Č.
VYPR. Ošlejšek	NORM.REF.		POZN.	Č. KUSOVNÍKU
PŘEKR. Ošlejšek 30.05.2021				
TECHNOL.	SCHVÁLIL Ošlejšek	11.11.2019	STARÝ V.	Č.V.

NÁZEV
Motor N3

N3119 02 B Z_S4_S1

Listů List